Exhibit B

SHEET INDEX

SHEET NO.	DESCRIPTION
	I. GENERAL
1	TITLE SHEET
2 - 6	GENERAL NOTES
7	ROADWAY QUANTITY SUMMARY
8 - 10	SUMMARY OF SMALL SIGNS
	II. TRAFFIC CONTROL PLAN
	TxDOT STANDARDS
11 - 22	* BC(1)-21 THROUGH BC(12)-21
23	* TCP(2-1)-18
24	* TCP(2-2)-18
	CITY STANDARDS
25	* 5.13) ROADSIDE TRAFFIC CONTROL SIGNS AND SUPPORTS
26	* 5.14) ROADSIDE TRAFFIC CONTROL SIGN LOCATION AND PLAN
27	* 5.15) ROADSIDE TRAFFIC CONTROL PLAN NOTES (1 OF 2)
28	* 5.16) ROADSIDE TRAFFIC CONTROL PLAN NOTES (2 OF 2)
	III. ROADWAY DETAILS
29 - 36	ROADWAY PLANS
37	MID-BLOCK RAMP DETAIL
38	CURB BUMP OUT DETAIL
	TxDOT STANDARDS
39	* CCCG-22
40 - 43	* PED-18
	CITY STANDARDS
44	* 2.09) 6" INTEGRAL CURB
45	* 2.10) 6" INTEGRAL SURMOUNTABLE CURB DETAIL
46	* 2.23) MEDIAN ISLAND PAVEMENT SLOPED END NOSE
47	* 2.25) CLEAR VISION AREA
48	* 2.30) REINFORCED CONCRETE GENERAL NOTES
49	* 2.31) REINFORCED CONCRETE TESTING REQUIREMENTS
50	* 4.02) 5.0' SIDEWALK DETAILS
51	* 4.09) BARRIER FREE CURB RAMP
52	* 4.11) DIRECTIONAL BARRIER FREE CURB RAMP SKEWED INTERSECTION
53	* 4.12) BARRIER FREE CURB RAMP JOINT DETAIL
54	* 4.15) BOLT-ON ADA REPLACEABLE TACTILE WARNING SURFACE UNITS
55	* 4.16) BOLT-ON ADA REPLACEABLE TACTILE WARNING INSTALLATION
56	BIKE LANE BARRIER
	IV. TRAFFIC ITEMS
	TxDOT STANDARDS
57	* D&OM(1)-20
58	* PM(AP)-21
59 - 61	* PM(1)-22 THROUGH PM(3)-22
62	* PM(4)-22A
63	* SMD(GEN)-08
64 - 66	* SMD(SLIP-1)-08 THROUGH SMD(SLIP-3)-08
	CITY STANDARDS
67	* 5.05) TYPICAL STANDARD PAVEMENT MARKINGS (1 OF 2)
68	* 5.06) TYPICAL STANDARD PAVEMENT MARKINGS (2 OF 2)
	V. ENVIRONMENTAL ISSUES
69 - 70	TxDOT STORMWATER POLLUTION PREVENTION PLAN
71	SWP3 EXAMPLE LAYOUT
72	ENVIRONMENTAL PERMITS, ISSUES AND COMMITMENTS (EPIC)
	TxDOT STANDARDS
73	* EC(1)-16
74	* EC(2)-16
75 - 77	* EC(9)-16

CITY OF LEWISVILLE, TEXAS

CONSTRUCTION PLANS FOR

KING ARTHUR BLVD TRAFFIC CALMING

STATE OF TEXAS
S. P. BOOTH
94903
LICENSED
PROFESSIONAL ENGINEER

10/16/2025

LEWISVILLE
Deep Roots. Broad Wings. Bright Future.

NET LENGTH OF ROADWAY = 7668 FT. = 1.45 MI.

LIMITS: FROM OLD DENTON RD TO LADY OF THE LAKE BLVD

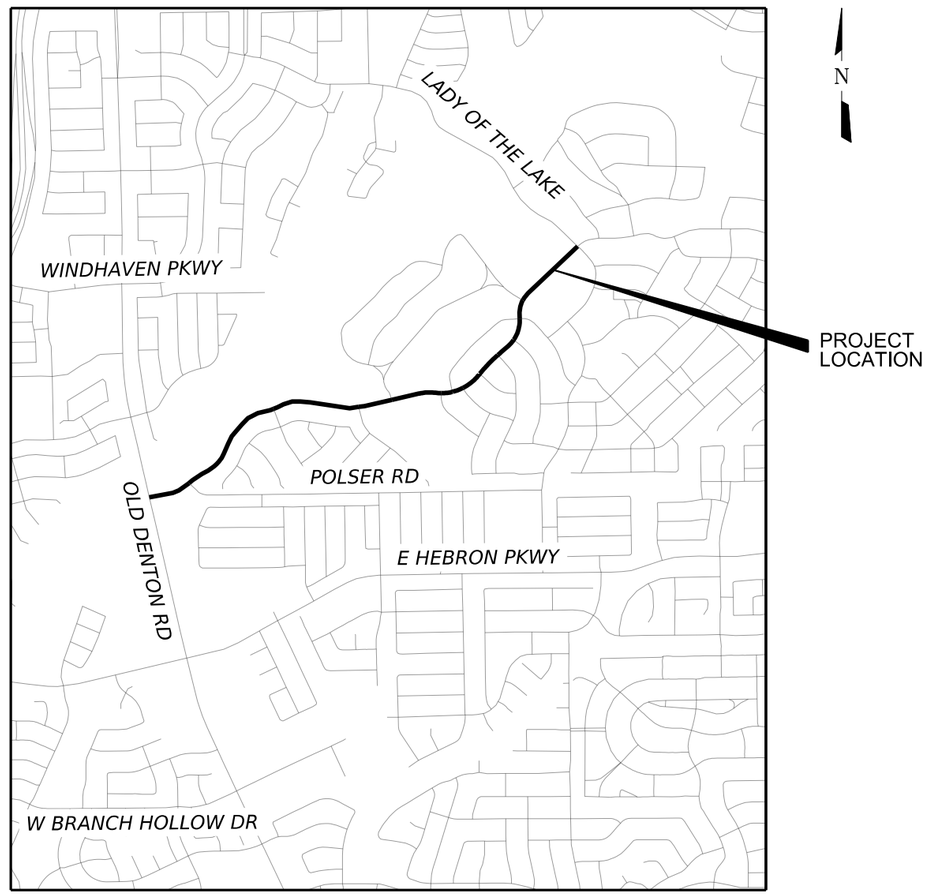

VICINITY MAP NTS

100% SUBMITTAL

AUGUST 2025

MAYOR
TJ GILMORE

CITY COUNCIL
BOB TROYER
WILLIAM J. MERIDITH
\+ RONNI CADE
BRANDON JONES
KRISTIN GREEN
PATRICK KELLY

CITY MANAGER
CLAIRE POWELL

\+ - MAYOR PRO TEM

THE STANDARD SHEETS SPECIFICALLY IDENTIFIED ABOVE BY A * HAVE BEEN ISSUED BY ME AND ARE APPLICABLE TO THIS PROJECT.

P.E. _____ DATE _____

THE STANDARD SHEETS SPECIFICALLY IDENTIFIED ABOVE BY A * HAVE BEEN ISSUED BY ME AND ARE APPLICABLE TO THIS PROJECT.

P.E. _____ DATE _____

PROJECT DESCRIPTION:
KING ARTHUR BLVD TRAFFIC CALMING
DESIGN SPEED = 25 MPH
ADDED PARKING SPACES = 158

LJA Engineering, Inc.
FRN - F-1386

CITY OF LEWISVILLE
GENERAL NOTES FOR CITY'S PROJECT

These General Notes must be made part of the construction drawings. The engineer is responsible for providing additional notes and specifications to construct the proposed improvements.

GENERAL NOTES:

1. The City of Lewisville's Inspector overtime policy allows the Contractor to work from 7:00 a.m. to 7:00 p.m., Monday through Saturday. Any request to work on a Saturday must be made prior to 12:00 p.m. on Thursday afternoon and will require a minimum for (4) hour charge. The Contractor shall pay overtime charges per current fee schedule with the City of Lewisville for work outside the normal work week (8:00 a.m. to 5:00 p.m., Monday through Friday). No work is allowed on Sundays or City holidays without written approval from the City Engineer or Designee.
2. The Contractor shall be responsible for providing a two (2) year, 100% Maintenance Bond to the City of Lewisville for all public improvements (water, sanitary sewer, storm drainage, pavement, sidewalk, screening walls, traffic signals, pavement markings, and excavation/fill, etc.) within right-of-ways or easements.
3. No water jetting is allowed for water, sanitary sewer, and storm sewer drainage construction.
4. All trenches that are excavated to a depth in excess of five (5) feet shall be excavated and maintained in a manner that meets all Occupational Safety and Health Administration (OSHA) standards. Prior to excavation and construction of the trench(es), the Contractor shall be responsible for submitting a copy of the trench safety plans prepared and sealed by a Licensed Professional Engineer in accordance with OSHA standards.
5. All embedment and backfill shall be wetted to approximate optimum moisture and compacted in twelve (12) inch lifts to 95% Standard Proctor density. Density tests shall be obtained for each lift and for each 150 lineal feet of trench or increment thereof. The Contractor shall be responsible for submitting a copy of all geotechnical laboratory reports/test results to the City of Lewisville.
6. There shall be no filling in the floodplain or dumping within the City of Lewisville without an approved grading plan and/or fill permit.
7. The Contractor shall be responsible for recording all field changes to the plans. The project engineer shall incorporate the changes in "Record Drawings".
8. The Contractor shall be responsible for providing erosion control in accordance with the Erosion Control Plan prepared by the engineer and/or as identified on the Storm Water Pollution Prevention Plan (S.W.P.P.P.). The Contractor shall install additional erosion control devices when field conditions warrant or as directed by the City of Lewisville or the Engineer.
9. The use of fly ash is not allowed in the concrete mix design.
10. All subgrades for public street improvements shall be tested for sulfates prior to subgrade treatment. Fill materials containing sulfates over 3000 ppm will not be allowed for use within public easements or right-of-ways.
11. The maximum P.I. allowed for a treated subgrade is 15.
12. The information shown on the plans is from existing plans or an on-the-ground survey. The contractor shall field verify this information by:
    (A) Obtaining flow line elevation at existing manholes.
    (B) Uncovering existing utilities and obtaining elevations.

    (C) Or by other means.
13. The Engineer shall be notified when proposed facility grades conflict with existing utility grades. Adjustment of water line depth, i.e. placement at a lower elevation may be required by the contractor in order to maintain adequate clearance to preserve and protect private and public utilities.
14. Valve stacks shall be removed from all abandoned valves when cutting and plugging existing utility lines.
15. All salvaged fire hydrants shall remain the property of the city. The contractor shall deliver these items to the city's public services complex yard, located at 1100 N. Kealy Ave.
    Note: The contractor shall remove any and all fittings from the hydrant (MJ's, Flanges, Pipe Debris, Etc.) prior to delivering to the city yard.
16. The contractor shall immediately repair or replace any physical damage to private property, including, but not limited to fences, walls, pavement, grass, trees, planters and lawn sprinkler and irrigation systems at no cost to the owner. This work shall be subsidiary to the contract, unless otherwise noted, and is not a separate pay item.
17. The contractor is responsible for the protection of the existing water meters and boxes. Any meter and/or boxes damaged by the contractor shall be replaced at the expense of the contractor who caused the damage.
18. The contractor shall locate any existing sprinkler systems within the right of way. If any sprinklers on private or public property are damaged by the contractor, they will be restored at the contractor's expense.
19. All water and sanitary sewer lines shown to be abandoned, shall be filled with grout.
20. The Contractor shall submit an overall construction schedule at the pre-construction meeting and provide monthly progress updates to the City Project Manager.
21. Streets, driveways, and alleys shall be kept free of mud, dust, and debris. Cleanup shall be performed daily or as directed by the City inspector. Unusable excavated material and construction debris shall be hauled off to an off-site disposal facility.
22. All materials and/or stockpiles should be kept in a designated area approved by the City Project Manager.
23. All sidewalks, curb ramps, driveways, and other pedestrian facilities shall comply with the current ADA Accessibility Guidelines and Texas Accessibility Standards (TAS). Non-conforming work shall be removed and replaced at the Contractor's expense.
24. The Contractor shall protect all existing survey markers, property corners, and monuments. Any disturbed monument shall be reset by a Registered Professional Land Surveyor at no cost to the City.
25. The Contractor shall provide and maintain a "project sign" at all times during construction. The sign shall include the project name, contractor's name and contact information, and the City project number. The sign location and format shall be approved by the City prior to installation.
26. The Contractor shall furnish, install and maintain all temporary and permanent traffic control devices in accordance with the latest TMUTCD and TxDOT Barricade & Construction Standards. Lane or street closures require a traffic-control plan and written City's Traffic Engineer approval at least 48 hours in advance.
27. Any testing that fails to meet city of Lewisville requirements shall be re-tested at the contractor's expense.
28. The contractor shall remove and replace any concrete pavement (Drive approaches/street panels) within five (5) days of saw cutting the pavement.
29. The contractor is responsible for all third-party costs associated with the construction of the project. (i.e. Inspections, Flaggers, Traffic Control performed by police officers and etc.)

LJA Engineering, Inc. LJA
FRN - F-1386

LEWISVILLE
Deep Roots. Broad Wings. Bright Future.

CITY OF LEWISVILLE

GENERAL NOTES

SHEET 1 OF 5

CONT	SECT	JOB	HIGHWAY
			VARIOUS
DIST	COUNTY		SHEET NO.
	DENTON		2

3:44:40 PM 10/16/2025
S:\WOU-Tran\5482\5482-240\400 Production\4 - Design\Plan Set\1. General\5482GN01.dgn

30. Prior to any construction the contractor shall familiarize themself with the contract documents and specifications, the plans including all notes, the City of Lewisville standards for construction and any other applicable standards and specifications relevant to the proper completion of the work specified. failure on the part of the contractor to familiarize themself with all standards or specifications pertaining to this work shall in no way relieve the contractor of his responsibility for performing the work in accordance with all such applicable standards and specifications.
31. In the event an item is not covered in the City of Lewisville construction standards, specifications, and details, the north central Texas council of governments (NCTCOG) public works construction standards 5th ed. shall apply with concurring notification to the city engineer and project engineer. The engineer shall have the final decision on all construction materials, methods, and procedures.
32. Construction inspection will be performed by representatives of the city, engineer, geotechnical testing lab engineer, and reviewing authorities and agencies. Unrestricted access shall be provided to them at all times. Contractor is responsible for understanding and scheduling required inspections.
33. All work shall conform to the city of Lewisville construction standards, specifications, and details, unless shown otherwise in the plans and specifications.
34. The contractor shall not unload or store materials, permit workers to park, nor park equipment within the street right-of-way where the street is open to the public travel without approval of the city.
35. Access to abutting property during the construction of this project must be maintained for emergency and local traffic at all times.
36. The contractor shall maintain fire emergency vehicle access to fire hydrants throughout the duration of the project. Inactive fire hydrants shall be bagged. The contractor may only close one fire hydrant at a time.
37. The contractor is responsible for keeping streets and sidewalks adjacent to the project free of mud and debris from construction at all times.
38. All barricades, warning signs, lights, devices, etc., for the guidance and protection of traffic and pedestrians must conform to the installation shown in the Texas Manual of Uniform Traffic Control Devices, as currently amended, Texas Department of Transportation.

GENERAL NOTES:

Find, for your information and convenience, tools such as forms, software, materials, and various other information provided by the Department at HTTPS://WWW.TXDOT.GOV/BUSINESS.HTML. Please note that these tools are updated periodically and your attention is directed to the latest edition.

The Contractor is to visit the site(s) and make his/her own examination of the site(s) where work is to be performed. The Contractor shall carefully examine these specifications and secure from the State any additional information that may be essential for a clear and full understanding of the work.

In the event of a called evacuation, emergencies, impending adverse weather or as directed, do not perform any work without written authorization. The District reserves the right to suspend all work in support of evacuations or emergencies occurring from other parts of the state. Any work performed, other than work directed by the Department, is unauthorized work in accordance with Item 5.

Sweep, clean and remove any construction waste, surplus materials, or debris from the roadway and right of way at the end of each day unless otherwise approved. The work performed will not be measured or paid for directly, but will be subsidiary to pertinent Items.

Cut existing pavement using a saw or other approved method to ensure a neat transverse and/or longitudinal line to assure a smooth tie-in with new pavement. Cut to a minimum depth of the final lift thickness. The work performed will not be measured or paid for directly, but will be subsidiary to pertinent Items.

Promptly pick up and properly dispose of paper and other materials used for pavement joints.

All pavement markings shall be in accordance with the latest edition of Texas MUTCD.

ITEM 2

It is recommended that prospective bidders examine the specified work locations with the Engineer to view the nature of the work, the need for close coordination with the various utilities, traffic control considerations, and other factors influencing the prosecution of the work.

LJA Engineering, Inc. LJA
FRN - F-1386

LEWISVILLE
Deep Roots. Broad Wings. Bright Future.

CITY OF LEWISVILLE

GENERAL NOTES

SHEET 2 OF 5

CONT	SECT	JOB	HIGHWAY
			VARIOUS
DIST	COUNTY		SHEET NO.
	DENTON		3

3:44:47 PM 10/16/2025
S:\WHOU-Tran\5482\5482-240\400 Production\4 - Design\Plan Set\1. General\5482GN02.dgn

ITEM 5

Field verify all dimensions and notify Engineer prior to initiating any work.

Verify the locations of utilities, underground or overhead, shown within the limits of the right-of-way. Adhere to OSHA Standards when working within the vicinity of overhead power lines. Coordinate with the utility companies and notify the Engineer of any possible conflicts. The work performed will not be measured or paid for directly, but will be subsidiary to pertinent Items.

The 811 call services for a utility location does not include TxDOT facilities. Provide notification to the District Traffic Signal Shop by email at CRP_UTILITY_LOCATE@TXDOT.GOV or call 361-739-6044 when planning, drilling, or excavating in areas where existing TxDOT underground utilities exist. Visual evidence of TxDOT underground utilities in the area include illumination poles, ground boxes, flashing beacons, traffic signals, etc. This notification must be provided 48 hours in advance of performing the work, but no earlier than 72 business hours before the work will commence. Drilled shaft locations or excavation areas must be staked prior to the notification so that the underground utilities can be located in relationship to the proposed work.

Notify the Engineer immediately of utility conflicts in accordance with Item 5.6. Refer to Item 4.5 for consideration of differing site conditions.

Establish and mark the location of existing standard pavement markings including but not limited to edge lines, transitions, passing and no passing zones, gore areas, etc.

ITEM 7

The project's total disturbed area is 0.0 acres. The disturbed area in all project locations and Contractor project specific locations (PSL's), within 1/4 mile of the project limits, will further establish the authorization requirements for storm water discharges. The department will obtain an authorization to discharge storm water from the Texas Commission on Environmental Quality (TCEQ) for the construction activities shown on the plans. Obtain any required authorization from the TCEQ for any PSL's on or off the ROW. When the total area disturbed on the project and PSL's within 1/4 mile of the project exceeds 5 acres, provide a copy of the Contractor NOI for PSL's to the Engineer (to the appropriate MS4 operator when the project is on an off-state system route).

Notify the Engineer of the disturbed acreage within one (1) mile of the project limits. Obtain authorization from the TCEQ for Contractor PSL's for construction support activities on or off ROW.

ITEM 8

Working days will be computed and charge in accordance with Article 8.3.1.4, "Standard Workweek."

Create and maintain a Critical Path Method (CPM) schedule. The CPM schedule shall be created and maintained using software fully compatible with Primavera Project Planner version P6 Professional R15.2.

Submit an updated progress schedule as directed to show proposed major changes, changes affecting compliance with the contract requirements, or changes affecting the critical path/controlling item of work.

Construction activity that would impede the flow of vehicular or pedestrian traffic immediately preceding or during NM Harrel Elementary School drop-off and pickup times is prohibited. School starts at 7:30 am and ends at 3:15pm. Bus drop off at Harrel Elementary is 6:55am-7:05am. Harrel Elementary opens the gate to enter the campus at approximately 3:00pm. After loading, the buses exit between 3:15pm and 3:35pm.

ITEM 9

When approved, provide uniformed, off-duty law enforcement officers with marked vehicles during work that requires a lane closure. The officer in marked vehicles shall be located as approved to monitor or direct traffic during the closure. The method used to direct traffic at signalized intersections shall be as approved. Additional officers and vehicles may be provided when approved or directed.

Complete the daily tracking form provided by the department and submit invoices that agree with the tracking form for payment at the end of each month approved services were provided.

Show proof of certification by the Texas Commission on Law Enforcement Standards. Certificates of completion should be available to all who finish the course. These should be kept by the officers to substantiate completion when reporting to the work site.

LJA Engineering, Inc. LJA
FRN - F-1386

LEWISVILLE
Deep Roots. Broad Wings. Bright Future.

CITY OF LEWISVILLE

GENERAL NOTES

SHEET 3 OF 5

CONT	SECT	JOB	HIGHWAY
			VARIOUS
DIST	COUNTY		SHEET NO.
	DENTON		4

3:44:52 PM 10/16/2025
S:\NHOU-Fran\5482\5482-401\400 Production\4 - Design\Plan Set\1. General\5482GN03.dgn

All law enforcement personnel used in Work Zone Traffic Control shall be trained for performing duties in work zones and are required to take "Safe and Effective Use of Law Enforcement Personnel in Work Zones" (Course #133119) which can be found online at the following site: www.nhi.fhwa.dot.gov

Certificates of completion should be available to all who finish the course. These should be kept by the officers to substantiate completion when reporting to the work site.

ITEM 100

Trim and remove brush and trees within the stations noted in the plans and as needed for construction operations. Unless shown otherwise in the plans or a designated non-mow area, perform trimming or removal for areas to the ROW limits. Trim or remove to provide minimum of 5 ft. of horizontal clearance and 7 ft. of vertical clearance for the following: sidewalks, paths, guard fence, rails, signs, object markers, and structures. Trim to provide a minimum of 12 ft. vertical clearance under all trees.

Obtain approval for proposed method of tree and brush trimming and removal. Vertical flailing equipment is not allowed. Treat damaged or cut branches, roots and/or stumps of all oak trees with a commercial tree wound dressing. Disinfect all pruning tools with a solution of 70% alcohol before moving from one tree to another. Unless otherwise approved remove all resulting vegetative debris from the ROW within 24 hours. The Engineer can stop all construction operations if the dressing, cut, and removal requirements are not followed.

Removal and disposal of existing abandoned utilities that were unable to be identified before letting required to support this project's construction shall be performed under the overall Preparing Right of Way. If you are uncertain whether the utility is active, contact the District Utility Section.

ITEM 162

Furnish and place 0.0 SY of grass sod. In drought conditions do not place sod as vegetation. Check with the area office in charge of the construction of the project.

ITEM 168

Apply vegetative watering as needed to supplement natural rainfall during the vegetation establishment period. Plan quantity of irrigation water is based on the application of a total of 1.3 gal of water each week for each sq. yd. of area that is sodded or seeded. Establishment time is estimated to be 12 weeks. Provide a schedule and coordinate watering cycles and rates per

cycle with the Engineer. Obtain approval if the quantity of water to be applied is expected to exceed the plan quantity. Adjust the amount of water applied with each cycle and the number of cycles each wk. according to actual site conditions. Drought or other conditions, as determined by the Engineer, may require the application of supplemental irrigation during hours other than normal working hours.

ITEM 500

"Materials on Hand" payments will not be considered in determining percentages for mobilization payments.

ITEM 502

In addition to providing a Contractor's Responsible Person and a phone number for emergency contact, have an employee available to respond on the project for emergencies and for taking corrective measures within 2 hours or within a reasonable time frame as specified by the Engineer.

Avoid placing stockpiles, equipment, and other construction materials within the roadway's horizontal clear zone or at any location that will constitute a hazard and will endanger traffic. If a stockpile is placed within the clear zone, address in accordance with the TMUTCD.

The Contractor Force Account "Safety Contingency" that has been established for this project is intended to be utilized for work zone enhancements, to improve the effectiveness of the Traffic Control Plan, that could not be foreseen in the project planning and design stage. These enhancements will be mutually agreed upon by the Engineer and the Contractor's Responsible Person based on weekly or more frequent traffic management reviews on the project. The Engineer may choose to use existing bid items if it does not slow the implementation of enhancement.

Mounting and moving the mailbox as needed for the various construction phases is subsidiary to Item 502.

Barricades, Signs, and Traffic Control Devices

When advanced warning flashing arrow panels and/or changeable message sign is specified, have one standby unit in good condition at the job site. Standby time shall be considered subsidiary to the bid item.

LJA Engineering, Inc. LJA
FRN - F-1386

LEWISVILLE
Deep Roots, Broad Wings, Bright Future.

CITY OF LEWISVILLE

GENERAL NOTES

SHEET 4 OF 5

CONT	SECT	JOB	HIGHWAY
			VARIOUS
DIST	COUNTY		SHEET NO.
	DENTON		5

3:44:55 PM 10/16/2025
S:\Work Trans\5482\5482-240\400 Production\4 - Design\Plan Sets\, General\5482GN04.dgn

Moving an existing sign to a temporary location is subsidiary to Item 502. Installations with permanent supports at permanent locations will be paid for under the applicable bid item(s).

ITEM 506

An Inspector will perform a regularly scheduled SWP3 inspection every 7 calendar days. Failure to address items noted on the SW3P inspection report within two report cycles may result in the Department stopping all construction operations, exclusive of time charges, or withholding that month's estimate until the SW3P deficiencies are corrected unless the Engineer determines that the area is too wet to correct SW3P deficiencies.

Failure to correctly maintain daily monitoring reports and submitting to TxDOT on a daily/weekly basis may result in the monthly estimate being withheld.

ITEM 531

The curb ramp locations shown in the plans have considered the geometric features of the intersection, traffic signals, and the pavement markings. If anything changes during construction, the location of curb ramps must be adjusted to ensure they meet TAS requirements.

ITEM 666

Use TY II markings (vs. an acrylic or epoxy) on asphalt surfaces as the sealer for the TY I markings, unless otherwise approved by the Engineer.

ITEM 672

Place all adhesive material directly from the heated dispenser to the pavement. Do not use portable or non-heated containers. Use adhesive of sufficient thickness so that when the marker is pressed into the adhesive, 1/8" or more adhesive will remain under 100% of the marker. The adhesive should extend not less than 1/2" but not more than 1 1/2" beyond the perimeter of the marker.

ITEM 677

Obtain approval before using the mechanical method for the elimination of existing thermoplastic pavement markings.

ITEM 6001

Furnish the portable changeable message signs displaying the correct message at least seven (7) days prior to beginning work or as directed.

The Contractor's Responsible Person (CRP) will maintain full control of messages at all times.

The Engineer will provide the sign message text to use at each sign.

A minimum of 2 PCMS will be required. However, additional units may be necessary depending on the work in progress.

Standby time will not be measured or paid for directly, but will be subsidiary to pertinent Items.

Portable changeable message signs may be moved and message changed at any time as deemed necessary by the Engineer. This will be considered subsidiary to Item 6001.

LJA Engineering, Inc. LJA
FRN - F-1386

LEWISVILLE
Deep Roots. Broad Wings. Bright Future.

CITY OF LEWISVILLE

GENERAL NOTES

SHEET 5 OF 5

CONT	SECT	JOB	HIGHWAY
			VARIOUS
DIST	COUNTY		SHEET NO.
	DENTON		6

3:44:59 PM 10/16/2025
S:\WHOU-Tran\5482\5482-240\400 Production\4 - Design\Plan Set\1. General\5482GN05.dgn

SUMMARY OF REMOVAL ITEMS						
LOCATION	104 7013	104 7017	677 7008	677 7009	677 7010	677 7031
	REMOV CONC (SIDEWALK, RAMP OR SUP)	REMOV CONC (CURB & GUTTER)	ELIM EXT PM & MRKS (24")	ELIM EXT PM & MRKS (ARROW)	ELIM EXT PM & MRKS (DBL ARROW)	ELIM EXT PM & MRKRS (PLOWABLE RPMS)
	SY	LF	LF	EA	EA	EA
SHEET 1 OF 8 - BEGIN PROJECT TO STA 19+60	0	0	132	3	0	71
SHEET 2 OF 8 - STA 19+60 TO STA 29+20	0	0	0	0	0	320
SHEET 3 OF 8 - STA 29+20 TO STA 38+80	0	44	0	0	0	277
SHEET 4 OF 8 - STA 38+80 TO STA 48+40	24	41	0	0	0	294
SHEET 5 OF 8 - STA 48+40 TO STA 58+00	44	57	0	0	0	297
SHEET 6 OF 8 - STA 58+00 TO STA 67+60	84	83	0	0	0	258
SHEET 7 OF 8 - STA 67+60 TO STA 77+20	78	135	0	0	0	269
SHEET 8 OF 8 - STA 77+20 TO END PROJECT	46	130	0	4	4	215
PROJECT TOTALS	276	490	132	7	4	2001

SUMMARY OF ROADWAY ITEMS							
LOCATION	528 7001	529 7007	531 7002	531 7005	531 7006	531 7007	531 7010
	LANDSCAPE PAVERS	CONC CURB (MONO) (TY II)	CONC SIDEWALKS (5")	CURB RAMPS (TY 1)	CURB RAMPS (TY 2)	CURB RAMPS (TY 3)	CURB RAMPS (TY 7)
	SY	LF	SY	EA	EA	EA	EA
SHEET 1 OF 8 - BEGIN PROJECT TO STA 19+60	0	0	0	0	0	0	0
SHEET 2 OF 8 - STA 19+60 TO STA 29+20	0	0	0	0	0	0	0
SHEET 3 OF 8 - STA 29+20 TO STA 38+80	19	102	0	0	0	0	0
SHEET 4 OF 8 - STA 38+80 TO STA 48+40	53	138	6	0	1	0	2
SHEET 5 OF 8 - STA 48+40 TO STA 58+00	43	162	8	0	1	2	2
SHEET 6 OF 8 - STA 58+00 TO STA 67+60	12	95	8	0	0	3	2
SHEET 7 OF 8 - STA 67+60 TO STA 77+20	24	177	27	0	1	1	4
SHEET 8 OF 8 - STA 77+20 TO END PROJECT	50	256	0	4	0	0	0
PROJECT TOTALS	201	930	49	4	3	6	10

SUMMARY OF PAVEMENT MARKING ITEMS															
LOCATION	644 7001	644 7009	666 7003	666 7024	666 7036	666 7042	666 7045	666 7093	666 7099	666 7108	666 7405	666 7417	672 7004	672 7005	*
	IN SM RD SN SUP&AM TY10BWG(1) SA(P)	IN SM RD SN SUP&AM TY10BWG(1) SB(P)	REFL PAV MRK TY I (W)4"(DOT) (100MIL)	REFL PAV MRK TY I (W)8"(SLD)(100MIL)	REFL PAV MRK TY I (W)24"(SLD) (100MIL)	REFL PAV MRK TY I (W)(ARROW) (100MIL)	REFL PAV MRK TY I(W)(DBL ARROW)(10 0MIL	REFL PAV MRK TY I (W)(BIKE ARW)(100MIL)	REFL PAV MRK TY I(W)(BIKE SYML)(100MI L)	REFL PAV MRK TY I (Y)4"(DOT) (100MIL)	REFL PAV MRK TY I (W)4"(SLD) (100MIL)	REFL PAV MRK TY I (Y)4"(SLD)(100MIL)	REFL PAV MRKR TY II-A-A	REFL PAV MRKR TY II-C-C	BIKE LANE BUFFERS
	EA	EA	LF	LF	LF	EA	EA	EA	EA	LF	LF	LF	EA	EA	EA
SHEET 1 OF 8 - BEGIN PROJECT TO STA 19+60	3	4	162	200	42	2	0	3	3	0	2987	425	6	120	26
SHEET 2 OF 8 - STA 19+60 TO STA 29+20	0	0	0		0	0	0	0	0	0	4167	1920	24	0	39
SHEET 3 OF 8 - STA 29+20 TO STA 38+80	4	0	70		189	0	0	3	3	146	2756	1657	21	18	32
SHEET 4 OF 8 - STA 38+80 TO STA 48+40	5	0	29		129	0	0	2	2	236	2800	1761	23	38	35
SHEET 5 OF 8 - STA 48+40 TO STA 58+00	5	0	21		249	0	0	4	4	233	2537	1781	23	44	10
SHEET 6 OF 8 - STA 58+00 TO STA 67+60	9	0	79		232	0	0	6	6	235	2497	1545	20	20	22
SHEET 7 OF 8 - STA 67+60 TO STA 77+20	7	0	71		403	0	0	5	5	222	2205	1612	21	33	3
SHEET 8 OF 8 - STA 77+20 TO END PROJECT	7	0	115		386	4	4	4	4	181	1958	1288	17	49	
PROJECT TOTALS	40	4	547	200	1630	6	4	27	27	1253	21907	11989	155	322	167

* SPEC PROVIDED BY CITY

LJA Engineering, Inc. LJA
FRN - F-1386

LEWISVILLE
Deep Roots. Broad Wings. Bright Future.

CITY OF LEWISVILLE

QUANTITY SUMMARY

SHEET 1 OF 1

CONT	SECT	JOB	HIGHWAY
			VARIOUS
DIST	COUNTY		SHEET NO.
	DENTON		7

10/16/2025
3:45:02 PM
S:\MOD-Tran\5482\5482-240\400 Production\4 - Design\Plan Set\1. General\5482GSR01.dgn

SUMMARY OF SMALL SIGNS

SM RD SGN ASSM TY XXXXX (X) XX (X-XXXX)

PLAN SHEET NO.	SIGN NO.	SIGN NOMENCLATURE	SIGN	DIMENSIONS	FLAT ALUMINUM (TYPE A)	EXAL ALUMINUM (TYPE G)	POST TYPE FRP = Fiberglass TWT = Thin-Wall 10BWG = 10 BWG S80 = Sch 80	POSTS 1 or 2	ANCHOR TYPE UA=Universal Conc UB=Universal Bolt SA=Slipbase-Conc SB=Slipbase-Bolt WS=Wedge Steel WP=Wedge Plastic	MOUNTING DESIGNATION PREFABRICATED P = "Plain" T = "T" U = "U"	MOUNTING DESIGNATION 1EXT or 2EXT = # of Ext BM = Extruded Wind Beam WC = 1.12 #/ft Wing Channel EXAL= Extruded Alum Sign Panels	BRIDGE MOUNT CLEARANCE SIGNS (See Note 2) TY = TYPE TY N TY S
1	1	R3-17		24x18			10BWG	1	SA	P		
		R3-17bP		24x8								
	2	R3-17		24x18			10BWG	1	SA	P		
	3-4	W11-15		30x30			10BWG	1	SB	P		
		W16-7PR		24x12								
	5-6	W11-15		30x30			10BWG	1	SB	P		
		W16-7PL		24x12								
	7	R1-2		30x30x30			10BWG	1	SA	P		
3	8-9	R3-17		24x18			10BWG	1	SA	P		
	10	D11-20aR		12x18			10BWG	1	SA	P		
	11	R3-17		24x18			10BWG	1	SA	P		
	12	R7-8		12x18			10BWG	1	SA	P		
3-4	13-14	R7-102		12x12			10BWG	1	SA	P		

ALUMINUM SIGN BLANKS THICKNESS	
Square Feet	Minimum Thickness
Less than 7.5	0.080"
7.5 to 15	0.100"
Greater than 15	0.125"

The Standard Highway Sign Designs for Texas (SHSD) can be found at the following website.

http://www.txdot.gov/

NOTE:

1. Sign supports shall be located as shown on the plans, except that the Engineer may shift the sign supports, within design guidelines, where necessary to secure a more desirable location or to avoid conflict with utilities. Unless otherwise shown on the plans, the Contractor shall stake and the Engineer will verify all sign support locations.

2. For installation of bridge mount clearance signs, see Bridge Mounted Clearance Sign Assembly (BMCS)Standard Sheet.

3. For Sign Support Descriptive Codes, see Sign Mounting Details Small Roadside Signs General Notes & Details SMD(GEN).

Texas Department of Transportation

Traffic Operations Division Standard

SUMMARY OF SMALL SIGNS

SOSS

FILE: sums16.dgn	DN: TxDOT	CK: TxDOT	DW: TxDOT	CK: TxDOT
© TxDOT May 1987	CONT	SECT	JOB	HIGHWAY
REVISIONS				VARIOUS
4-16 8-16	DIST	COUNTY		SHEET NO.
		DENTON		8

18

DISCLAIMER:
The use of this standard is governed by the "Texas Engineering Practice Act". No warranty of any kind is made by TxDOT for any purpose whatsoever. TxDOT assumes no responsibility for the conversion of this standard to other formats or for incorrect results or damages resulting from its use.

DATE: 10/16/2025 3:45:06 PM
FILE: S:\WHOU-Tran\5482\5482-2401\400 Production\4 - Design\Plan Set\1. General\5482SM04.dgn

SUMMARY OF SMALL SIGNS

SM RD SGN ASSM TY XXXXX (X) XX (X-XXXX)

PLAN SHEET NO.	SIGN NO.	SIGN NOMENCLATURE	SIGN	DIMENSIONS	FLAT ALUMINUM (TYPE A)	EXAL ALUMINUM (TYPE G)	POST TYPE FRP = Fiberglass TWT = Thin-Wall 10BWG = 10 BWG S80 = Sch 80	POSTS 1 or 2	ANCHOR TYPE UA=Universal Conc UB=Universal Bolt SA=Slipbase-Conc SB=Slipbase-Bolt WS=Wedge Steel WP=Wedge Plastic	MOUNTING DESIGNATION PREFABRICATED P = "Plain" T = "T" U = "U"	MOUNTING DESIGNATION 1EXT or 2EXT = # of Ext BM = Extruded Wind Beam WC = 1.12 #/ft Wing Channel EXAL= Extruded Alum Sign Panels	BRIDGE MOUNT CLEARANCE SIGNS (See Note 2) TY = TYPE TY N TY S
4	15	W3-1		30x30			10BWG	1	SA	P		
4	16-17	R1-1		30x30			10BWG	1	SA	P		
	18	R3-17		30x30			10BWG	1	SA	P		
5	19	W3-1		30x30			10BWG	1	SA	P		
	20-23	W11-15 W16-7PL		30x30 24x12			10BWG	1	SA	P		
6	24	R7-8		12x18			10BWG	1	SA	P		
	25-26	W11-15 W16-7PL		30x30 24x12			10BWG	1	SA	P		
	27-29	R7-102		12x12			10BWG	1	SA	P		
	30-31	W11-15 W16-7PL		30x30 24x12			10BWG	1	SA	P		
	32	R7-102		12x12			10BWG	1	SA	P		

ALUMINUM SIGN BLANKS THICKNESS	
Square Feet	Minimum Thickness
Less than 7.5	0.080"
7.5 to 15	0.100"
Greater than 15	0.125"

The Standard Highway Sign Designs for Texas (SHSD) can be found at the following website.

http://www.txdot.gov/

NOTE:

1. Sign supports shall be located as shown on the plans, except that the Engineer may shift the sign supports, within design guidelines, where necessary to secure a more desirable location or to avoid conflict with utilities. Unless otherwise shown on the plans, the Contractor shall stake and the Engineer will verify all sign support locations.
2. For installation of bridge mount clearance signs, see Bridge Mounted Clearance Sign Assembly (BMCS)Standard Sheet.
3. For Sign Support Descriptive Codes, see Sign Mounting Details Small Roadside Signs General Notes & Details SMD(GEN).

Texas Department of Transportation

Traffic Operations Division Standard

SUMMARY OF SMALL SIGNS

SOSS

FILE: sums16.dgn	DN: TxDOT	CK: TxDOT	DW: TxDOT	CK: TxDOT
© TxDOT May 1987	CONT	SECT	JOB	HIGHWAY
REVISIONS				VARIOUS
4-16 8-16	DIST	COUNTY		SHEET NO.
		DENTON		9

18

DISCLAIMER:
The use of this standard is governed by the "Texas Engineering Practice Act". No warranty of any kind is made by TxDOT for any purpose whatsoever. TxDOT assumes no responsibility for the conversion of this standard to other formats or for incorrect results or damages resulting from its use.

DATE: 10/16/2025 3:45:11 PM
FILE: S:\WHOU-Tran\5482\5482-2401\400 Production\4 - Design\Plan Set\1. General\5482SN02.dgn

SUMMARY OF SMALL SIGNS

SM RD SGN ASSM TY XXXXX (X) XX (X-XXXX)

PLAN SHEET NO.	SIGN NO.	SIGN NOMENCLATURE	SIGN	DIMENSIONS	FLAT ALUMINUM (TYPE A)	EXAL ALUMINUM (TYPE G)	POST TYPE FRP = Fiberglass TWT = Thin-Wall 10BWG = 10 BWG S80 = Sch 80	POSTS 1 or 2	ANCHOR TYPE UA=Universal Conc UB=Universal Bolt SA=Slipbase-Conc SB=Slipbase-Bolt WS=Wedge Steel WP=Wedge Plastic	MOUNTING DESIGNATION PREFABRICATED P = "Plain" T = "T" U = "U"	MOUNTING DESIGNATION 1EXT or 2EXT = # of Ext BM = Extruded Wind Beam WC = 1.12 #/ft Wing Channel EXAL= Extruded Alum Sign Panels	BRIDGE MOUNT CLEARANCE SIGNS (See Note 2) TY = TYPE TY N TY S
		W11-15		30x30								
7	33-34						10BWG	1	SA	P		
		W16-7PL		24x12								
	35	R7-8		12x18			10BWG	1	SA	P		
	36-37	W3-1		30x30			10BWG	1	SA	P		
		W11-15		30x30								
	38						10BWG	1	SA	P		
		W16-7PL		24x12								
	39	W11-15		30x30			10BWG	1	SA	P		
8	40-41	R1-5cL		36x48			10BWG	1	SA	P		
	42-43	R7-8		12x18			10BWG	1	SA	P		
		W11-15		30x30								
	44-45						10BWG	1	SA	P		
		W16-7PL		24x12								
		R3-17		24x18								
	46						10BWG	1	SA	P		
		R3-17bP		24x8								

ALUMINUM SIGN BLANKS THICKNESS	
Square Feet	Minimum Thickness
Less than 7.5	0.080"
7.5 to 15	0.100"
Greater than 15	0.125"

The Standard Highway Sign Designs for Texas (SHSD) can be found at the following website.

http://www.txdot.gov/

NOTE:

1. Sign supports shall be located as shown on the plans, except that the Engineer may shift the sign supports, within design guidelines, where necessary to secure a more desirable location or to avoid conflict with utilities. Unless otherwise shown on the plans, the Contractor shall stake and the Engineer will verify all sign support locations.
2. For installation of bridge mount clearance signs, see Bridge Mounted Clearance Sign Assembly (BMCS)Standard Sheet.
3. For Sign Support Descriptive Codes, see Sign Mounting Details Small Roadside Signs General Notes & Details SMD(GEN).

Texas Department of Transportation

Traffic Operations Division Standard

SUMMARY OF SMALL SIGNS

SOSS

FILE: sums16.dgn	DN: TxDOT	CK: TxDOT	DW: TxDOT	CK: TxDOT
© TxDOT May 1987	CONT	SECT	JOB	HIGHWAY
REVISIONS				VARIOUS
4-16 8-16	DIST	COUNTY		SHEET NO.
		DENTON		10

18

DISCLAIMER:
The use of this standard is governed by the "Texas Engineering Practice Act". No warranty of any kind is made by TxDOT for any purpose whatsoever. TxDOT assumes no responsibility for the conversion of this standard to other formats or for incorrect results or damages resulting from its use.

DATE: 10/16/2025 3:45:15 PM
FILE: S:\WHOU-Tran\5482\5482-2401\400 Production\4 - Design\Plan Set\1. General\5482SN03.dgn

BARRICADE AND CONSTRUCTION (BC) STANDARD SHEETS GENERAL NOTES:

1. The Barricade and Construction Standard Sheets (BC sheets) are intended to show typical examples for placement of temporary traffic control devices, construction pavement markings, and typical work zone signs. The information contained in these sheets meet or exceed the requirements shown in the "Texas Manual on Uniform Traffic Control Devices" (TMUTCD).

2. The development and design of the Traffic Control Plan (TCP)is the responsibility of the Engineer.

3. The Contractor may propose changes to the TCP that are signed and sealed by a licensed professional engineer for approval. The Engineer may develop, sign and seal Contractor proposed changes.

4. The Contractor is responsible for installing and maintaining the traffic control devices as shown in the plans. The Contractor may not move or change the approximate location of any device without the approval of the Engineer.

5. Geometric design of lane shifts and detours should, when possible, meet the applicable design criteria contained in manuals such as the American Association of State Highway and Transportation Officials (AASHTO), "A Policy on Geometric Design of Highways and Streets," the TxDOT "Roadway Design Manual" or engineering judgment.

6. When projects abut, the Engineer(s) may omit the END ROAD WORK, TRAFFIC FINES DOUBLE, and other advance warning signs if the signing would be redundant and the work areas appear continuous to the motorists. If the adjacent project is completed first, the Contractor shall erect the necessary warning signs as shown on these sheets, the TCP sheets or as directed by the Engineer. The BEGIN ROAD WORK NEXT X MILES sign shall be revised to show appropriate work zone distance.

7. The Engineer may require duplicate warning signs on the median side of divided highways where median width will permit and traffic volumes justify the signing.

8. All signs shall be constructed in accordance with the details found in the "Standard Highway Sign Designs for Texas," latest edition. Sign details not shown in this manual shall be shown in the plans or the Engineer shall provide a detail to the Contractor before the sign is manufactured.

9. The temporary traffic control devices shown in the illustrations of the BC sheets are examples. As necessary, the Engineer will determine the most appropriate traffic control devices to be used.

10. Where highway construction or maintenance work is being undertaken, other than mobile operations as defined by the Texas Manual on Uniform Traffic Control Devices, CSJ limit signs are required. CSJ limit signs are shown on BC(2). The OBEY WARNING SIGNS STATE LAW sign, STAY ALERT TALK OR TEXT LATER and the WORK ZONE TRAFFIC FINES DOUBLE sign with plaque shall be erected in advance of the CSJ limits. The BEGIN ROAD WORK NEXT X MILES, CONTRACTOR and END ROAD WORK signs shall be erected at or near the CSJ limits. For mobile operations, CSJ limit signs are not required.

11. Traffic control devices should be in place only while work is actually in progress or a definite need exists.

12. The Engineer has the final decision on the location of all traffic control devices.

13. Inactive equipment and work vehicles, including workers' private vehicles must be parked away from travel lanes. They should be as close to the right-of-way line as possible, or located behind a barrier or guardrail, or as approved by the Engineer.

WORKER SAFETY NOTES:

1. Workers on foot who are exposed to traffic or to construction equipment within the right-of-way shall wear high-visibility safety apparel meeting the requirements of ISEA "American National Standard for High-Visibility Apparel," or equivalent revisions, and labeled as ANSI 107-2004 standard performance for Class 2 or 3 risk exposure. Class 3 garments should be considered for high traffic volume work areas or night time work.

2. Except in emergency situations, flagger stations shall be illuminated when flagging is used at night.

COMPLIANT WORKZONE TRAFFIC CONTROL DEVICES

1. Only pre-qualified products shall be used. The "Compliant Work Zone Traffic Control Devices List" (CWZTCD) describes pre-qualified products and their sources.

2. Work zone traffic control devices shall be compliant with the Manual for Assessing safety Hardware (MASH).

THE DOCUMENTS BELOW CAN BE FOUND ON-LINE AT http://www.txdot.gov
COMPLIANT WORK ZONE TRAFFIC CONTROL DEVICES LIST (CWZTCD)
DEPARTMENTAL MATERIAL SPECIFICATIONS (DMS)
MATERIAL PRODUCER LIST (MPL)
ROADWAY DESIGN MANUAL - SEE "MANUALS (ONLINE MANUALS)"
STANDARD HIGHWAY SIGN DESIGNS FOR TEXAS (SHSD)
TEXAS MANUAL ON UNIFORM TRAFFIC CONTROL DEVICES (TMUTCD)
TRAFFIC ENGINEERING STANDARD SHEETS

Texas Department of Transportation

Traffic Safety Division Standard

BARRICADE AND CONSTRUCTION GENERAL NOTES AND REQUIREMENTS

BC(1)-21

FILE: bc-21.dgn	DN: TxDOT	CK: TxDOT	DW: TxDOT	CK: TxDOT
© TxDOT November 2002	CONT	SECT	JOB	HIGHWAY
REVISIONS				VARIOUS
4-03 7-13	DIST	COUNTY		SHEET NO.
9-07 8-14				
5-10 5-21		DENTON		11

DISCLAIMER:
The use of this standard is governed by the "Texas Engineering Practice Act". No warranty of any kind is made by TxDOT for any purpose whatsoever. TxDOT assumes no responsibility for the conversion of this standard to other formats or for incorrect results or damages resulting from its use.

DATE: 10/16/2025 3:45:23 PM
FILE: S:\WHOU-Tran\5482\5482-2401\400 Production\4 - Design\Plan Set\2. TCP\Standards\TxDOT\bc-21.dgn

DISCLAIMER:
The use of this standard is governed by the "Texas Engineering Practice Act". No warranty of any kind is made by TxDOT for any purpose whatsoever. TxDOT assumes no responsibility for the conversion of this standard to other formats or for incorrect results or damages resulting from its use.

DATE: 10/16/2025 3:45:24 PM
FILE: S:\WHOU-Tran\5482\5482-2401\400 Production\4 - Design\Plan Set\2. TCP\Standards\TxDOT\bc-21.dgn

TYPICAL LOCATION OF CROSSROAD SIGNS

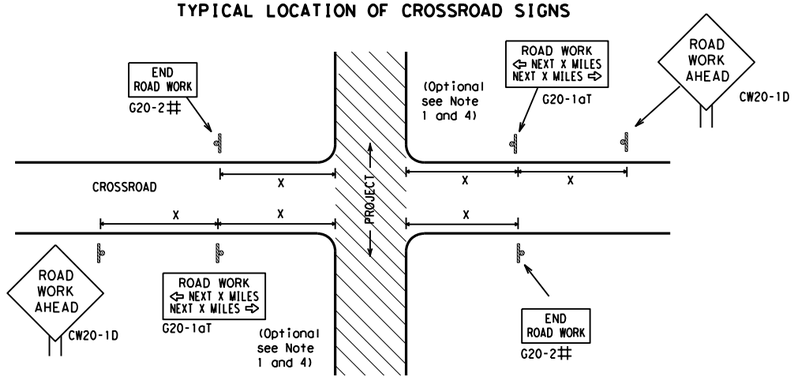

May be mounted on back of "ROAD WORK AHEAD"(CW20-1D) sign with approval of Engineer. (See note 2 below)

1. The typical minimum signing on a crossroad approach should be a "ROAD WORK AHEAD" (CW20-1D)sign and a (G20-2) "END ROAD WORK" sign, unless noted otherwise in plans.
2. The Engineer may use the reduced size 36" x 36" ROAD WORK AHEAD (CW20-1D) sign mounted back to back with the reduced size 36" x 18" "END ROAD WORK"(G20-2) sign on low volume crossroads (see Note 4 under "Typical Construction Warning Sign Size and Spacing"). See the "Standard Highway Sign Designs for Texas" manual for sign details. The Engineer may omit the advance warning signs on low volume crossroads. The Engineer will determine whether a road is low volume as per TMUTCD Part 5. This information shall be shown in the plans.
3. Based on existing field conditions, the Engineer/Inspector may require additional signs such as FLAGGER AHEAD, LOOSE GRAVEL, or other appropriate signs. When additional signs are required, these signs will be considered part of the minimum requirements. The Engineer/Inspector will determine the proper location and spacing of any sign not shown on the BC sheets, Traffic Control Plan sheets or the Work Zone Standard Sheets.
4. The "ROAD WORK NEXT X MILES"(G20-1aT)sign shall be required at high volume crossroads to advise motorists of the length of construction in either direction from the intersection. The Engineer will determine whether a roadway is considered high volume.
5. Additional traffic control devices may be shown elsewhere in the plans for higher volume crossroads.
6. When work occurs in the intersection area, appropriate traffic control devices, as shown elsewhere in the plans or as determined by the Engineer/Inspector, shall be in place.

T-INTERSECTION

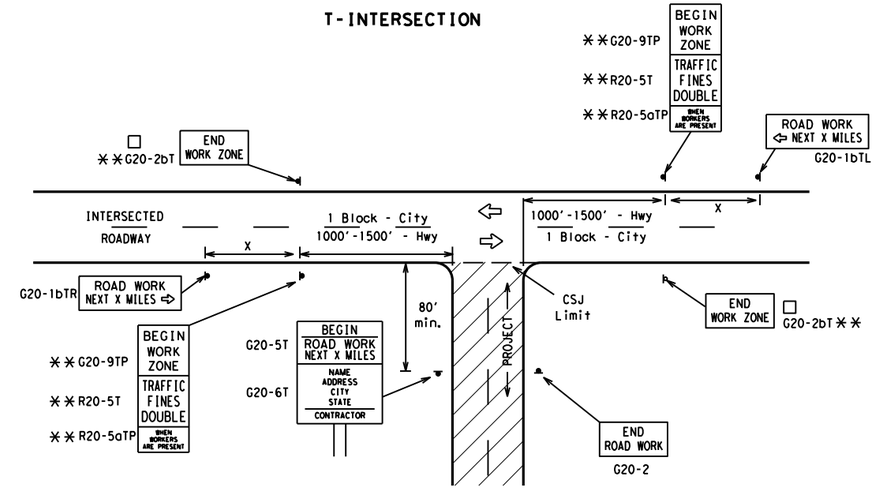

CSJ LIMITS AT T-INTERSECTION

1. The Engineer will determine the types and location of any additional traffic control devices, such as a flagger and accompanying signs, or other signs, that should be used when work is being performed at or near an intersection.
2. If construction closes the road at a T-intersection, the Contractor shall place the "CONTRACTOR NAME"(G20-6T) sign behind the Type 3 Barricades for the road closure (see BC(10) also). The "ROAD WORK NEXT X MILES" left arrow(G20-1bTL) and "ROAD WORK NEXT X MILES" right arrow (G20-1bTR)" signs shall be replaced by the detour signing called for in the plans.

TYPICAL CONSTRUCTION WARNING SIGN SIZE AND SPACING[1,5,6]

SIZE

Sign Number or Series	Conventional Road	Expressway/ Freeway
CW20[4] CW21 CW22 CW23 CW25	48" x 48"	48" x 48"
CW1, CW2, CW7, CW8, CW9, CW11, CW14	36" x 36"	48" x 48"
CW3, CW4, CW5, CW6, CW8-3, CW10, CW12	48" x 48"	48" x 48"

SPACING

Posted Speed	Sign △ Spacing "X"
MPH	Feet (Apprx.)
30	120
35	160
40	240
45	320
50	400
55	500[2]
60	600[2]
65	700[2]
70	800[2]
75	900[2]
80	1000[2]
✱	✱[3]

✱ For typical sign spacings on divided highways, expressways and freeways, see Part 6 of the "Texas Manual on Uniform Traffic Control Devices" (TMUTCD) typical application diagrams or TCP Standard Sheets.

△ Minimum distance from work area to first Advance Warning sign nearest the work area and/or distance between each additional sign.

GENERAL NOTES

1. Special or larger size signs may be used as necessary.
2. Distance between signs should be increased as required to have 1500 feet advance warning.
3. Distance between signs should be increased as required to have 1/2 mile or more advance warning.
4. 36" x 36" "ROAD WORK AHEAD" (CW20-1D)signs may be used on low volume crossroads at the discretion of the Engineer as per TMUTCD Part 5. See Note 2 under "Typical Location of Crossroad Signs".
5. Only diamond shaped warning sign sizes are indicated.
6. See sign size listing in "TMUTCD", Sign Appendix or the "Standard Highway Sign Designs for Texas" manual for complete list of available sign design sizes.

WORK AREAS IN MULTIPLE LOCATIONS WITHIN CSJ LIMITS

SAMPLE LAYOUT OF SIGNING FOR WORK BEGINNING AT THE CSJ LIMITS

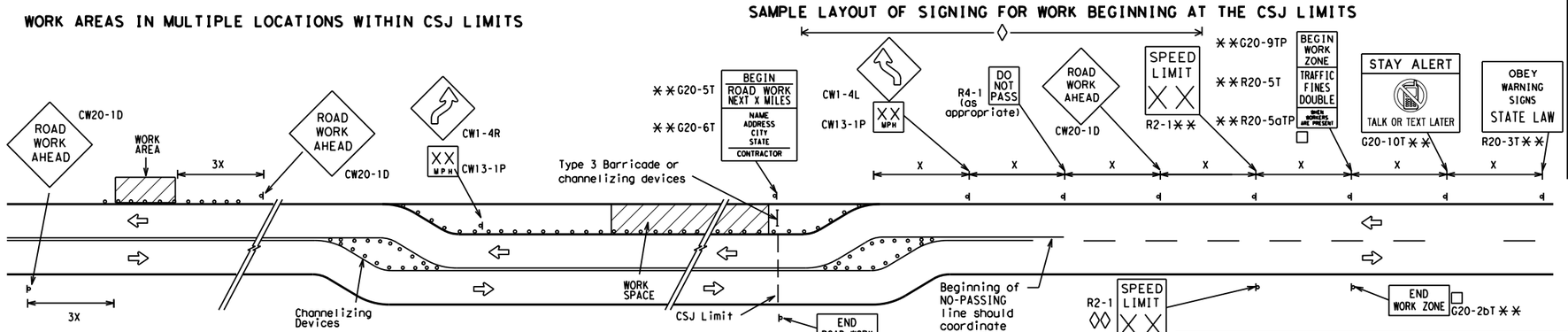

When extended distances occur between minimal work spaces, the Engineer/Inspector should ensure additional "ROAD WORK AHEAD"(CW20-1D)signs are placed in advance of these work areas to remind drivers they are still within the project limits. See the applicable TCP sheets for exact location and spacing of signs and channelizing devices.

SAMPLE LAYOUT OF SIGNING FOR WORK BEGINNING DOWNSTREAM OF THE CSJ LIMITS

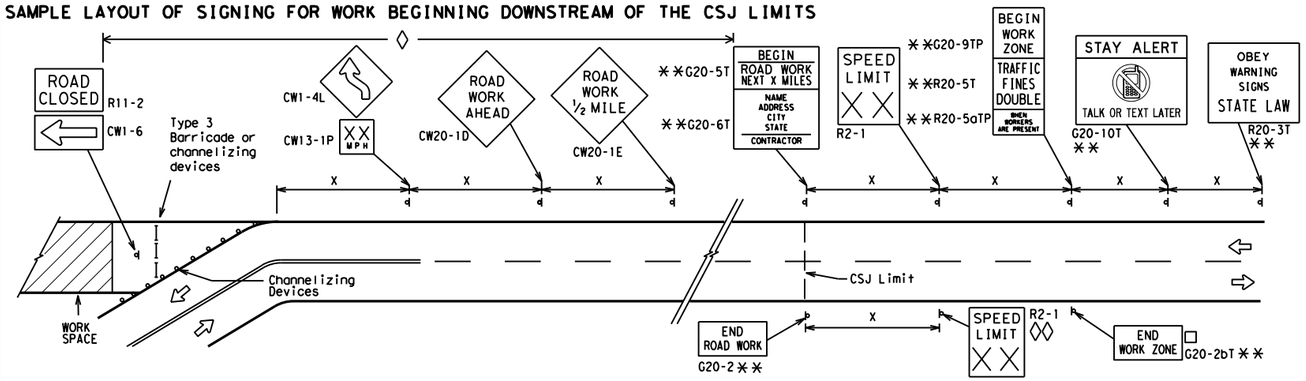

NOTES

The Contractor shall determine the appropriate distance to be placed on the G20-1 series signs and "BEGIN ROAD WORK NEXT X MILES"(G20-5T)sign for each specific project. This distance shall replace the "X" and shall be rounded to the nearest whole mile with the approval of the Engineer. No decimals shall be used.

□ The "BEGIN WORK ZONE"(G20-9TP) and "END WORK ZONE" (G20-2bT) shall be used as shown on the sample layout when advance signs are required outside the CSJ Limits. They inform the motorist of entering or leaving a part of the work zone lying outside the CSJ Limits where traffic fines may double if workers are present.

✱✱ CSJ limit signing is required for highway construction and maintenance work, with the exception of mobile operations.

◊ Area for placement of "ROAD WORK AHEAD" (CW20-1D)sign and other signs or devices as called for on the Traffic Control Plan.

◊◊ Contractor will install a regulatory speed limit sign at the end of the work zone.

LEGEND

⊢⊣	Type 3 Barricade
○ ○ ○	Channelizing Devices
▬	Sign
X	See Typical Construction Warning Sign Size and Spacing chart or the TMUTCD for sign spacing requirements.

SHEET 2 OF 12

Texas Department of Transportation — Traffic Safety Division Standard

BARRICADE AND CONSTRUCTION PROJECT LIMIT

BC(2)-21

FILE: bc-21.dgn	DN: TxDOT	CK: TxDOT	DW: TxDOT	CK: TxDOT
© TxDOT November 2002	CONT	SECT	JOB	HIGHWAY
REVISIONS				VARIOUS
9-07 8-14	DIST		COUNTY	SHEET NO.
7-13 5-21			DENTON	12

TYPICAL APPLICATION OF WORK ZONE SPEED LIMIT SIGNS

Work zone speed limits shall be regulatory, established in accordance with the "Procedures for Establishing Speed Zones," and approved by the Texas Transportation Commission, or by City Ordinance when within Incorporated City Limits.

Reduced speeds should only be posted in the vicinity of work activity and not throughout the entire project.

Regulatory work zone speed signs (R2-1) shall be removed or covered during periods when they are not needed.

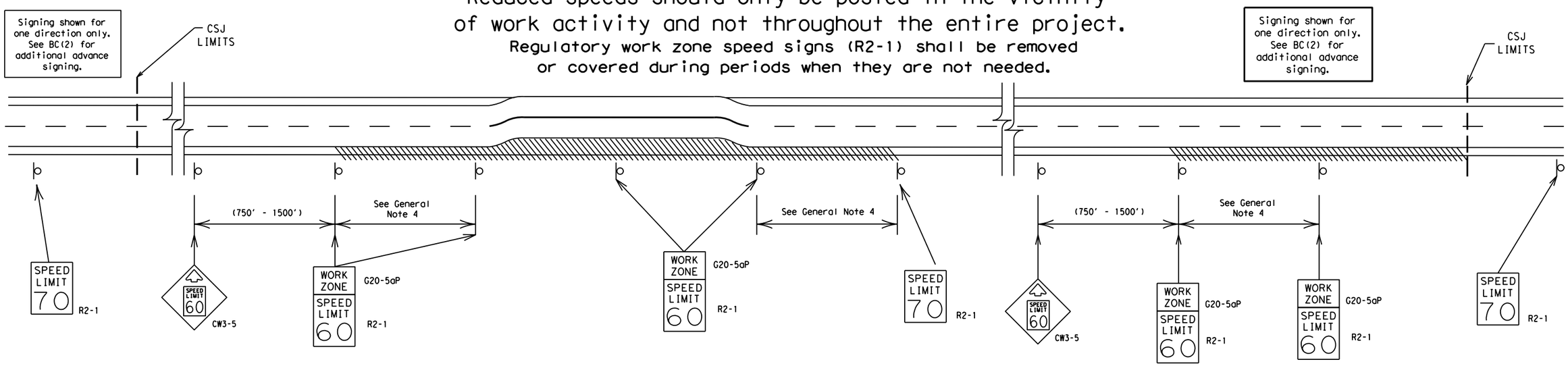

GUIDANCE FOR USE:

LONG/INTERMEDIATE TERM WORK ZONE SPEED LIMITS

This type of work zone speed limit should be included on the design of the traffic control plans when restricted geometrics with a lower design speed are present in the work zone and modification of the geometrics to a higher design speed is not feasible.

Long/Intermediate Term Work Zone Speed Limit signs, when approved as described above, should be posted and visible to the motorist when work activity is present. Work activity may also be defined as a change in the roadway that requires a reduced speed for motorists to safely negotiate the work area, including:

a) rough road or damaged pavement surface
b) substantial alteration of roadway geometrics (diversions)
c) construction detours
d) grade
e) width
f) other conditions readily apparent to the driver

As long as any of these conditions exist, the work zone speed limit signs should remain in place.

SHORT TERM WORK ZONE SPEED LIMITS

This type of work zone speed limit may be included on the design of the traffic control plans when workers or equipment are not behind concrete barrier, when work activity is within 10 feet of the traveled way or actually in the traveled way.

Short Term Work Zone Speed Limit signs should be posted and visible to the motorists only when work activity is present. When work activity is not present, signs shall be removed or covered.
(See Removing or Covering on BC(4)).

GENERAL NOTES

1. Regulatory work zone speed limits should be used only for sections of construction projects where speed control is of major importance.
2. Regulatory work zone speed limit signs shall be placed on supports at a 7 foot minimum mounting height.
3. Speed zone signs are illustrated for one direction of travel and are normally posted for each direction of travel.
4. Frequency of work zone speed limit signs should be:
   40 mph and greater 0.2 to 2 miles
   35 mph and less 0.2 to 1 mile
5. Regulatory speed limit signs shall have black legend and border on a white reflective background (See "Reflective Sheeting" on BC(4)).
6. Fabrication, erection and maintenance of the"ADVANCE SPEED LIMIT"(CW3-5)sign, "WORK ZONE"(G20-5aP) plaque and the "SPEED LIMIT"(R2-1)signs shall not be paid for directly, but shall be considered subsidiary to Item 502.
7. Turning signs from view, laying signs over or down will not be allowed, unless as otherwise noted under "REMOVING OR COVERING" on BC(4).
8. Techniques that may help reduce traffic speeds include but are not limited to:
   A. Law enforcement.
   B. Flagger stationed next to sign.
   C. Portable changeable message sign (PCMS).
   D. Low-power (drone) radar transmitter.
   E. Speed monitor trailers or signs.
9. Speeds shown on details above are for illustration only.
   Work Zone Speed Limits should only be posted as approved for each project.
10. For more specific guidance concerning the type of work, work zone conditions and factors impacting allowable regulatory construction speed zone reduction see TxDOT form #1204 in the TxDOT e-form system.

Texas Department of Transportation — Traffic Safety Division Standard

BARRICADE AND CONSTRUCTION WORK ZONE SPEED LIMIT

BC(3)-21

FILE: bc-21.dgn	DN: TxDOT	CK: TxDOT	DW: TxDOT	CK: TxDOT
© TxDOT November 2002	CONT	SECT	JOB	HIGHWAY
REVISIONS				VARIOUS
9-07 8-14	DIST		COUNTY	SHEET NO.
7-13 5-21			DENTON	13

DISCLAIMER:
The use of this standard is governed by the "Texas Engineering Practice Act". No warranty of any kind is made by TxDOT for any purpose whatsoever. TxDOT assumes no responsibility for the conversion of this standard to other formats or for incorrect results or damages resulting from its use.

DATE: 10/16/2025 3:45:25 PM
FILE: S:\WHOU-Tran\5482\5482-2401\400 Production\4 - Design\Plan Set\2. TCP's\Standards\TxDOT\bc-21.dgn

TYPICAL MINIMUM CLEARANCES FOR LONG TERM AND INTERMEDIATE TERM SIGNS

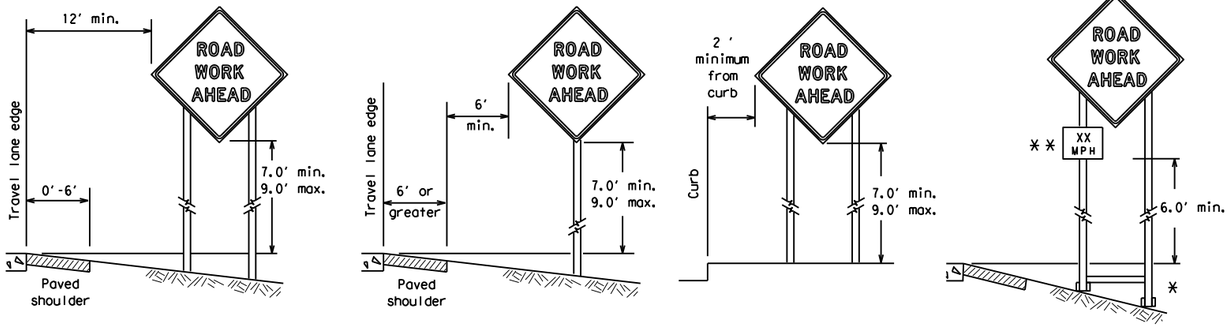

✱ When placing skid supports on unlevel ground, the leg post lengths must be adjusted so the sign appears straight and plumb. Objects shall NOT be placed under skids as a means of leveling.

✱✱ When plaques are placed on dual-leg supports, they should be attached to the upright nearest the travel lane. Supplemental plaques (advisory or distance) should not cover the surface of the parent sign.

ATTACHMENT FOR SIGN SUPPORTS

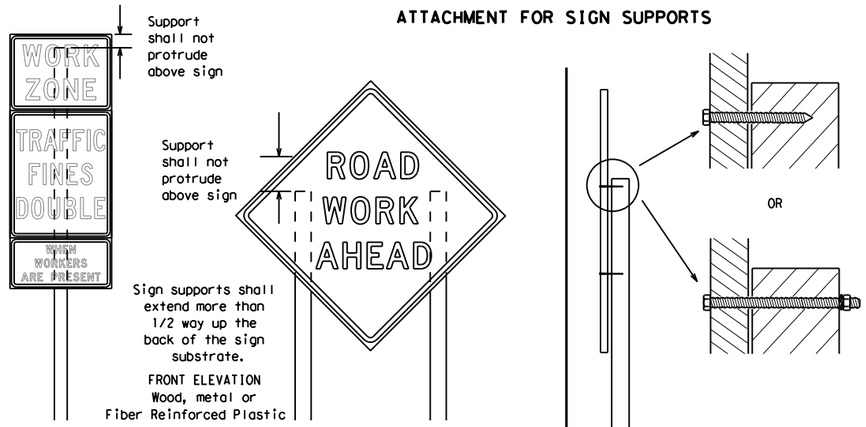

Attachment to wooden supports will be by bolts and nuts or screws. Use TxDOT's or manufacturer's recommended procedures for attaching sign substrates to other types of sign supports

Nails shall NOT be allowed. Each sign shall be attached directly to the sign support. Multiple signs shall not be joined or spliced by any means. Wood supports shall not be extended or repaired by splicing or other means.

Splicing embedded perforated square metal tubing in order to extend post height will only be allowed when the splice is made using four bolts, two above and two below the spice point. Splice must be located entirely behind the sign substrate, not near the base of the support. Splice insert lengths should be at least 5 times nominal post size, centered on the splice and of at least the same gauge material.

STOP/SLOW PADDLES

1. STOP/SLOW paddles are the primary method to control traffic by flaggers. The STOP/SLOW paddle size should be 24" x 24".
2. STOP/SLOW paddles shall be retroreflectorized when used at night.
3. STOP/SLOW paddles may be attached to a staff with a minimum length of 6' to the bottom of the sign.
4. Any lights incorporated into the STOP or SLOW paddle faces shall only be as specifically described in Section 6E.03 Hand Signaling Devices in the TMUTCD.

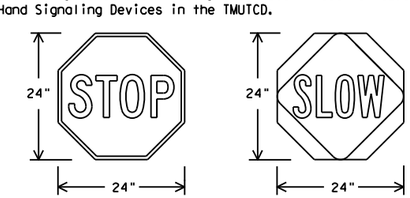

Background - Red
Legend & Border - White

Background - Orange
Legend & Border - Black

SHEETING REQUIREMENTS (WHEN USED AT NIGHT)		
USAGE	COLOR	SIGN FACE MATERIAL
BACKGROUND	RED	TYPE B OR C SHEETING
BACKGROUND	ORANGE	TYPE B_{FL} OR C_{FL} SHEETING
LEGEND & BORDER	WHITE	TYPE B OR C SHEETING
LEGEND & BORDER	BLACK	ACRYLIC NON-REFLECTIVE FILM

CONTRACTOR REQUIREMENTS FOR MAINTAINING PERMANENT SIGNS WITHIN THE PROJECT LIMITS

1. Permanent signs are used to give notice of traffic laws or regulations, call attention to conditions that are potentially hazardous to traffic operations, show route designations, destinations, directions, distances, services, points of interest, and other geographical, recreational, specific service (LOGO), or cultural information. Drivers proceeding through a work zone need the same, if not better route guidance as normally installed on a roadway without construction.
2. When permanent regulatory or warning signs conflict with work zone conditions, remove or cover the permanent signs until the permanent sign message matches the roadway condition. For details for covering large guide signs see the TS-CD standard.
3. When existing permanent signs are moved and relocated due to construction purposes, they shall be visible to motorists at all times.
4. If existing signs are to be relocated on their original supports, they shall be installed on crashworthy bases as shown on the SMD Standard sheets. The signs shall meet the required mounting heights shown on the BC Sheets or the SMD Standards. This work should be paid for under the appropriate pay item for relocating existing signs.
5. If permanent signs are to be removed and relocated using temporary supports, the Contractor shall use crashworthy supports as shown on the BC standard sheets, TLRS standard sheets or the CWZTCD list. The signs shall meet the required mounting heights shown on the BC, or the SMD standard sheets during construction. This work should be paid for under the appropriate pay item for relocating existing signs.
6. Any sign or traffic control device that is struck or damaged by the Contractor or his/her construction equipment shall be replaced as soon as possible by the Contractor to ensure proper guidance for the motorists. This will be subsidiary to Item 502.

GENERAL NOTES FOR WORK ZONE SIGNS

1. Contractor shall install and maintain signs in a straight and plumb condition and/or as directed by the Engineer.
2. Wooden sign posts shall be painted white.
3. Barricades shall NOT be used as sign supports.
4. All signs shall be installed in accordance with the plans or as directed by the Engineer. Signs shall be used to regulate, warn, and guide the traveling public safely through the work zone.
5. The Contractor may furnish either the sign design shown in the plans or in the "Standard Highway Sign Designs for Texas" (SHSD). The Engineer/Inspector may require the Contractor to furnish other work zone signs that are shown in the TMUTCD but may have been omitted from the plans. Any variation in the plans shall be documented by written agreement between the Engineer and the Contractor's Responsible Person. All changes must be documented in writing before being implemented. This can include documenting the changes in the Inspector's TxDOT diary and having both the Inspector and Contractor initial and date the agreed upon changes.
6. The Contractor shall furnish sign supports listed in the "Compliant Work Zone Traffic Control Device List" (CWZTCD) for small roadside signs. Supports for temporary large roadside signs shall meet the requirements detailed on the Temporary Large Roadside Signs (TLRS) standard sheets. The Contractor shall install the sign support in accordance with the manufacturer's recommendations. If there is a question regarding installation procedures, the Contractor shall furnish the Engineer a copy of the manufacturer's installation recommendations so the Engineer can verify the correct procedures are being followed.
7. The Contractor is responsible for installing signs on approved supports and replacing signs with damaged or cracked substrates and/or damaged or marred reflective sheeting as directed by the Engineer/Inspector.
8. Identification markings may be shown only on the back of the sign substrate. The maximum height of letters and/or company logos used for identification shall be 1 inch.
9. The Contractor shall replace damaged wood posts. New or damaged wood sign posts shall not be spliced.

DURATION OF WORK (as defined by the "Texas Manual on Uniform Traffic Control Devices" Part 6)

1. The types of sign supports, sign mounting height, the size of signs, and the type of sign substrates can vary based on the type of work being performed. The Engineer is responsible for selecting the appropriate size sign for the type of work being performed. The Contractor is responsible for ensuring the sign support, sign mounting height and substrate meets manufacturer's recommendations in regard to crashworthiness and duration of work requirements.
   a. Long-term stationary - work that occupies a location more than 3 days.
   b. Intermediate-term stationary - work that occupies a location more than one daylight period up to 3 days, or nighttime work lasting more than one hour.
   c. Short-term stationary - daytime work that occupies a location for more than 1 hour in a single daylight period.
   d. Short, duration - work that occupies a location up to 1 hour.
   e. Mobile - work that moves continuously or intermittently (stopping for up to approximately 15 minutes.)

SIGN MOUNTING HEIGHT

1. The bottom of Long-term/Intermediate-term signs shall be at least 7 feet, but not more than 9 feet, above the paved surface, except as shown for supplemental plaques mounted below other signs.
2. The bottom of Short-term/Short Duration signs shall be a minimum of 1 foot above the pavement surface but no more than 2 feet above the ground.
3. Long-term/Intermediate-term Signs may be used in lieu of Short-term/Short Duration signing.
4. Short-term/Short Duration signs shall be used only during daylight and shall be removed at the end of the workday or raised to appropriate Long-term/Intermediate sign height.
5. Regulatory signs shall be mounted at least 7 feet, but not more than 9 feet, above the paved surface regardless of work duration.

SIZE OF SIGNS

1. The Contractor shall furnish the sign sizes shown on BC (2) unless otherwise shown in the plans or as directed by the Engineer.

SIGN SUBSTRATES

1. The Contractor shall ensure the sign substrate is installed in accordance with the manufacturer's recommendations for the type of sign support that is being used. The CWZTCD lists each substrate that can be used on the different types and models of sign supports.
2. "Mesh" type materials are NOT an approved sign substrate, regardless of the tightness of the weave.
3. All wooden individual sign panels fabricated from 2 or more pieces shall have one or more plywood cleat, 1/2" thick by 6" wide, fastened to the back of the sign and extending fully across the sign. The cleat shall be attached to the back of the sign using wood screws that do not penetrate the face of the sign panel. The screws shall be placed on both sides of the splice and spaced at 6" centers. The Engineer may approve other methods of splicing the sign face.

REFLECTIVE SHEETING

1. All signs shall be retroreflective and constructed of sheeting meeting the color and retro-reflectivity requirements of DMS-8300 for rigid signs or DMS-8310 for roll-up signs. The web address for DMS specifications is shown on BC(1).
2. White sheeting, meeting the requirements of DMS-8300 Type A, shall be used for signs with a white background.
3. Orange sheeting, meeting the requirements of DMS-8300 Type B_{FL} or Type C_{FL}, shall be used for rigid signs with orange backgrounds.

SIGN LETTERS

1. All sign letters and numbers shall be clear, and open rounded type uppercase alphabet letters as approved by the Federal Highway Administration (FHWA) and as published in the "Standard Highway Sign Design for Texas" manual. Signs, letters and numbers shall be of first class workmanship in accordance with Department Standards and Specifications.

REMOVING OR COVERING

1. When sign messages may be confusing or do not apply, the signs shall be removed or completely covered.
2. Long-term stationary or intermediate stationary signs installed on square metal tubing may be turned away from traffic 90 degrees when the sign message is not applicable. This technique may not be used for signs installed in the median of divided highways or near any intersections where the sign may be seen from approaching traffic.
3. Signs installed on wooden skids shall not be turned at 90 degree angles to the roadway. These signs should be removed or completely covered when not required.
4. When signs are covered, the material used shall be opaque, such as heavy mil black plastic, or other materials which will cover the entire sign face and maintain their opaque properties under automobile headlights at night, without damaging the sign sheeting.
5. Burlap shall NOT be used to cover signs.
6. Duct tape or other adhesive material shall NOT be affixed to a sign face.
7. Signs and anchor stubs shall be removed and holes backfilled upon completion of work.

SIGN SUPPORT WEIGHTS

1. Where sign supports require the use of weights to keep from turning over, the use of sandbags with dry, cohesionless sand should be used.
2. The sandbags will be tied shut to keep the sand from spilling and to maintain a constant weight.
3. Rock, concrete, iron, steel or other solid objects shall not be permitted for use as sign support weights.
4. Sandbags should weigh a minimum of 35 lbs and a maximum of 50 lbs.
5. Sandbags shall be made of a durable material that tears upon vehicular impact. Rubber (such as tire inner tubes) shall NOT be used.
6. Rubber ballasts designed for channelizing devices should not be used for ballast on portable sign supports. Sign supports designed and manufactured with rubber bases may be used when shown on the CWZTCD list.
7. Sandbags shall only be placed along or laid over the base supports of the traffic control device and shall not be suspended above ground level or hung with rope, wire, chains or other fasteners. Sandbags shall be placed along the length of the skids to weigh down the sign support.
8. Sandbags shall NOT be placed under the skid and shall not be used to level sign supports placed on slopes.

FLAGS ON SIGNS

1. Flags may be used to draw attention to warning signs. When used, the flag shall be 16 inches square or larger and shall be orange or fluorescent red-orange in color. Flags shall not be allowed to cover any portion of the sign face.

Texas Department of Transportation — Traffic Safety Division Standard

BARRICADE AND CONSTRUCTION TEMPORARY SIGN NOTES

BC(4)-21

FILE: bc-21.dgn	DN: TxDOT	CK: TxDOT	DW: TxDOT	CK: TxDOT
© TxDOT November 2002	CONT	SECT	JOB	HIGHWAY
REVISIONS				VARIOUS
9-07 8-14	DIST		COUNTY	SHEET NO.
7-13 5-21			DENTON	14

DISCLAIMER:
The use of this standard is governed by the "Texas Engineering Practice Act". No warranty of any kind is made by TxDOT for any purpose whatsoever. TxDOT assumes no responsibility for the conversion of this standard to other formats or for incorrect results or damages resulting from its use.

DATE: 10/16/2025 3:45:26 PM
FILE: S:\WHOU-Tran\S482\5482-2401\400 Production\4 - Design\Plan Set\2. TCP\Standards\TxDOT\bc-21.dgn

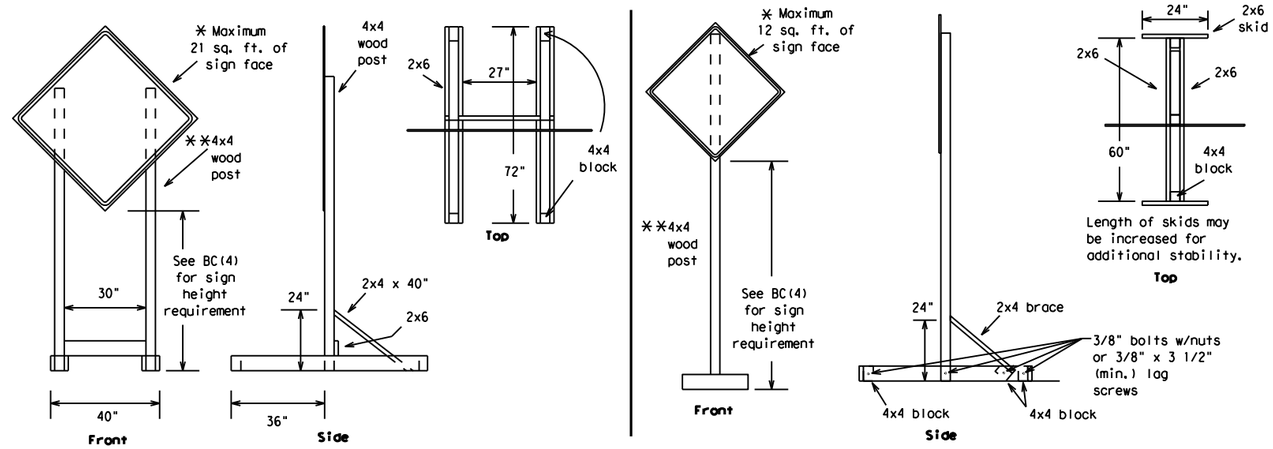

SKID MOUNTED WOOD SIGN SUPPORTS

* LONG/INTERMEDIATE TERM STATIONARY - PORTABLE SKID MOUNTED SIGN SUPPORTS

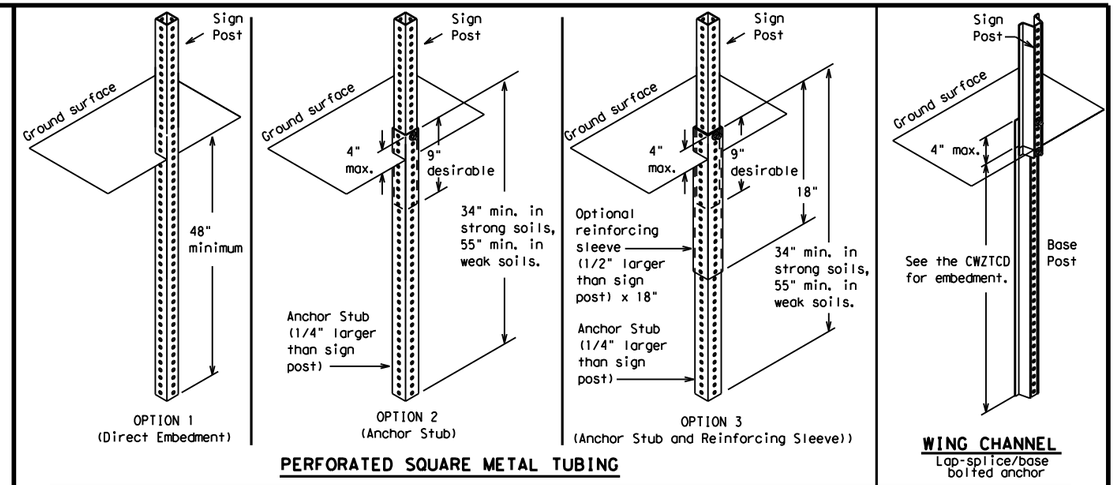

GROUND MOUNTED SIGN SUPPORTS

Refer to the CWZTCD and the manufacturer's installation procedure for each type sign support.
The maximum sign square footage shall adhere to the manufacturer's recommendation.
Two post installations can be used for larger signs.

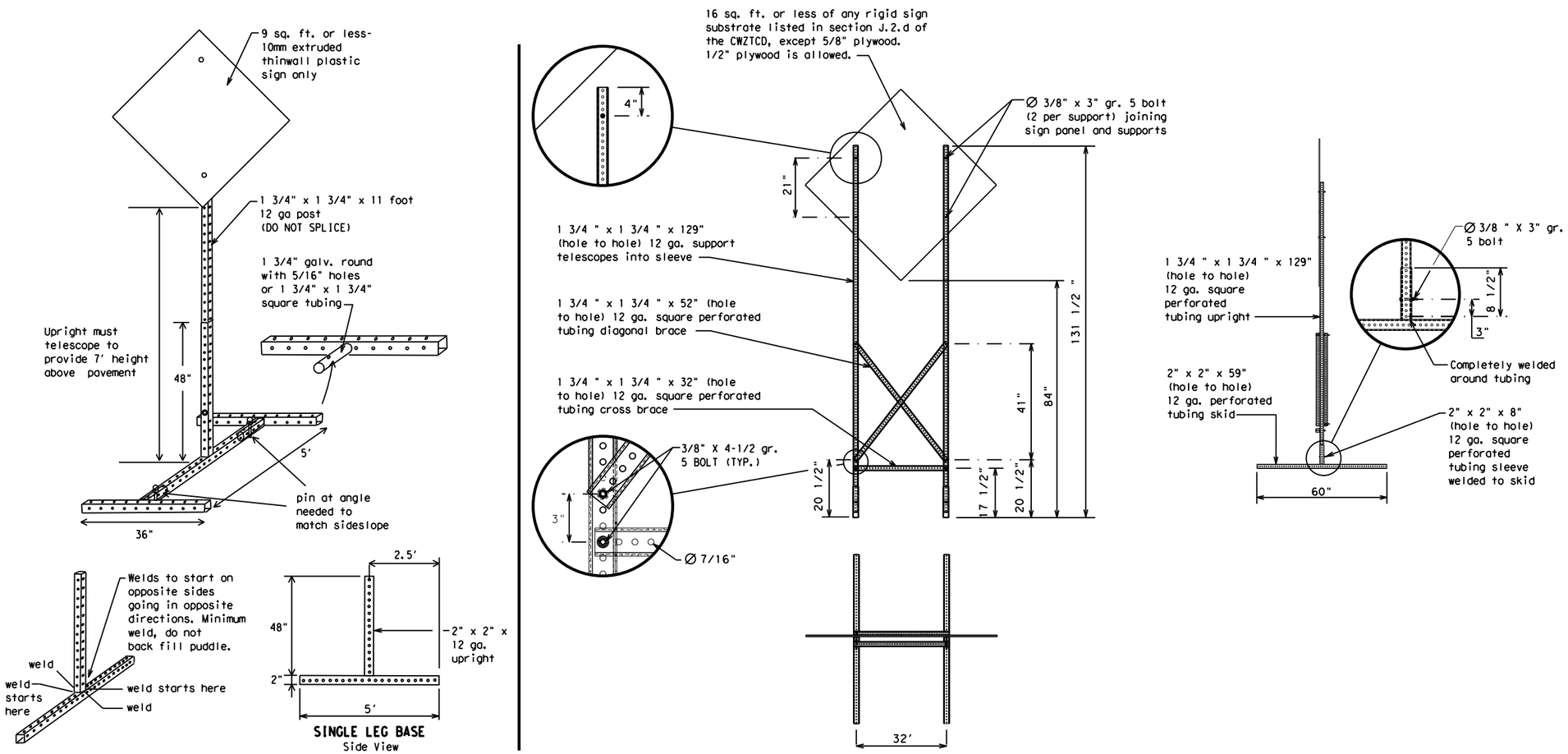

SKID MOUNTED PERFORATED SQUARE STEEL TUBING SIGN SUPPORTS

* LONG/INTERMEDIATE TERM STATIONARY - PORTABLE SKID MOUNTED SIGN SUPPORTS

WEDGE ANCHORS

Both steel and plastic Wedge Anchor Systems as shown on the SMD Standard Sheets may be used as temporary sign supports for signs up to 10 square feet of sign face. They may be set in concrete or in sturdy soils if approved by the Engineer. (See web address for "Traffic Engineering Standard Sheets" on BC(1)).

OTHER DESIGNS

MORE DETAILS OF APPROVED LONG/INTERMEDIATE AND SHORT TERM SUPPORTS CAN BE FOUND ON THE CWZTCD LIST. SEE BC(1) FOR WEBSITE LOCATION.

GENERAL NOTES

1. Nails may be used in the assembly of wooden sign supports, but 3/8" bolts with nuts or 3/8" x 3 1/2" lag screws must be used on every joint for final connection.
2. No more than 2 sign posts shall be placed within a 7 ft. circle, except for specific materials noted on the CWZTCD List.
3. When project is completed, all sign supports and foundations shall be removed from the project site. This will be considered subsidiary to Item 502.

* See BC(4) for definition of "Work Duration."

** Wood sign posts MUST be one piece. Splicing will NOT be allowed. Posts shall be painted white.

☐ See the CWZTCD for the type of sign substrate that can be used for each approved sign support.

SHEET 5 OF 12

Texas Department of Transportation — Traffic Safety Division Standard

BARRICADE AND CONSTRUCTION TYPICAL SIGN SUPPORT

BC(5)-21

FILE: bc-21.dgn	DN: TxDOT	CK: TxDOT	DW: TxDOT	CK: TxDOT
© TxDOT November 2002	CONT	SECT	JOB	HIGHWAY
REVISIONS				VARIOUS
9-07 8-14	DIST		COUNTY	SHEET NO.
7-13 5-21			DENTON	15

DISCLAIMER:
The use of this standard is governed by the "Texas Engineering Practice Act". No warranty of any kind is made by TxDOT for any purpose whatsoever. TxDOT assumes no responsibility for the conversion of this standard to other formats or for incorrect results or damages resulting from its use.

DATE: 10/16/2025 3:45:27 PM
FILE: S:\WHOU-Tran\5482\5482-2401\400 Production\4 - Design\Plan Set\2. TCP\Standards\TxDOT\bc-21.dgn

WHEN NOT IN USE, REMOVE THE PCMS FROM THE RIGHT-OF-WAY OR PLACE THE PCMS BEHIND BARRIER OR GUARDRAIL WITH SIGN PANEL TURNED PARALLEL TO TRAFFIC

PORTABLE CHANGEABLE MESSAGE SIGNS

1. The Engineer/Inspector shall approve all messages used on portable changeable message signs (PCMS).
2. Messages on PCMS should contain no more than 8 words (about four to eight characters per word), not including simple words such as "TO," "FOR," "AT," etc.
3. Messages should consist of a single phase, or two phases that alternate. Three-phase messages are not allowed. Each phase of the message should convey a single thought, and must be understood by itself.
4. Use the word "EXIT" to refer to an exit ramp on a freeway; i.e., "EXIT CLOSED." Do not use the term "RAMP."
5. Always use the route or interstate designation (IH, US, SH, FM) along with the number when referring to a roadway.
6. When in use, the bottom of a stationary PCMS message panel should be a minimum 7 feet above the roadway, where possible.
7. The message term "WEEKEND" should be used only if the work is to start on Saturday morning and end by Sunday evening at midnight. Actual days and hours of work should be displayed on the PCMS if work is to begin on Friday evening and/or continue into Monday morning.
8. The Engineer/Inspector may select one of two options which are available for displaying a two-phase message on a PCMS. Each phase may be displayed for either four seconds each or for three seconds each.
9. Do not "flash" messages or words included in a message. The message should be steady burn or continuous while displayed.
10. Do not present redundant information on a two-phase message; i.e., keeping two lines of the message the same and changing the third line.
11. Do not use the word "Danger" in message.
12. Do not display the message "LANES SHIFT LEFT" or "LANES SHIFT RIGHT" on a PCMS. Drivers do not understand the message.
13. Do not display messages that scroll horizontally or vertically across the face of the sign.
14. The following table lists abbreviated words and two-word phrases that are acceptable for use on a PCMS. Both words in a phrase must be displayed together. Words or phrases not on this list should not be abbreviated, unless shown in the TMUTCD.
15. PCMS character height should be at least 18 inches for trailer mounted units. They should be visible from at least 1/2 (.5) mile and the text should be legible from at least 600 feet at night and 800 feet in daylight. Truck mounted units must have a character height of 10 inches and must be legible from at least 400 feet.
16. Each line of text should be centered on the message board rather than left or right justified.
17. If disabled, the PCMS should default to an illegible display that will not alarm motorists and will only be used to alert workers that the PCMS has malfunctioned. A pattern such as a series of horizontal solid bars is appropriate.

WORD OR PHRASE	ABBREVIATION
Access Road	ACCS RD
Alternate	ALT
Avenue	AVE
Best Route	BEST RTE
Boulevard	BLVD
Bridge	BRDG
Cannot	CANT
Center	CTR
Construction Ahead	CONST AHD
CROSSING	XING
Detour Route	DETOUR RTE
Do Not	DONT
East	E
Eastbound	(route) E
Emergency	EMER
Emergency Vehicle	EMER VEH
Entrance, Enter	ENT
Express Lane	EXP LN
Expressway	EXPWY
XXXX Feet	XXXX FT
Fog Ahead	FOG AHD
Freeway	FRWY, FWY
Freeway Blocked	FWY BLKD
Friday	FRI
Hazardous Driving	HAZ DRIVING
Hazardous Material	HAZMAT
High-Occupancy	HOV
Vehicle Highway	HWY
Hour(s)	HR, HRS
Information	INFO
It Is	ITS
Junction	JCT
Left	LFT
Left Lane	LFT LN
Lane Closed	LN CLOSED
Lower Level	LWR LEVEL
Maintenance	MAINT

WORD OR PHRASE	ABBREVIATION
Major	MAJ
Miles	MI
Miles Per Hour	MPH
Minor	MNR
Monday	MON
Normal	NORM
North	N
Northbound	(route) N
Parking	PKING
Road	RD
Right Lane	RT LN
Saturday	SAT
Service Road	SERV RD
Shoulder	SHLDR
Slippery	SLIP
South	S
Southbound	(route) S
Speed	SPD
Street	ST
Sunday	SUN
Telephone	PHONE
Temporary	TEMP
Thursday	THURS
To Downtown	TO DWNTN
Traffic	TRAF
Travelers	TRVLRS
Tuesday	TUES
Time Minutes	TIME MIN
Upper Level	UPR LEVEL
Vehicles (s)	VEH, VEHS
Warning	WARN
Wednesday	WED
Weight Limit	WT LIMIT
West	W
Westbound	(route) W
Wet Pavement	WET PVMT
Will Not	WONT

Roadway designation # IH-number, US-number, SH-number, FM-number

RECOMMENDED PHASES AND FORMATS FOR PCMS MESSAGES DURING ROADWORK ACTIVITIES

(The Engineer may approve other messages not specifically covered here.)

Phase 1: Condition Lists

Road/Lane/Ramp Closure List

FREEWAY CLOSED X MILE	FRONTAGE ROAD CLOSED
ROAD CLOSED AT SH XXX	SHOULDER CLOSED XXX FT
ROAD CLSD AT FM XXXX	RIGHT LN CLOSED XXX FT
RIGHT X LANES CLOSED	RIGHT X LANES OPEN
CENTER LANE CLOSED	DAYTIME LANE CLOSURES
NIGHT LANE CLOSURES	I-XX SOUTH EXIT CLOSED
VARIOUS LANES CLOSED	EXIT XXX CLOSED X MILE
EXIT CLOSED	RIGHT LN TO BE CLOSED
MALL DRIVEWAY CLOSED	X LANES CLOSED TUE - FRI
XXXXXXXX BLVD CLOSED	

Other Condition List

ROADWORK XXX FT	ROAD REPAIRS XXXX FT
FLAGGER XXXX FT	LANE NARROWS XXXX FT
RIGHT LN NARROWS XXXX FT	TWO-WAY TRAFFIC XX MILE
MERGING TRAFFIC XXXX FT	CONST TRAFFIC XXX FT
LOOSE GRAVEL XXXX FT	UNEVEN LANES XXXX FT
DETOUR X MILE	ROUGH ROAD XXXX FT
ROADWORK PAST SH XXXX	ROADWORK NEXT FRI-SUN
BUMP XXXX FT	US XXX EXIT X MILES
TRAFFIC SIGNAL XXXX FT	LANES SHIFT *

* LANES SHIFT in Phase 1 must be used with STAY IN LANE in Phase 2.

Phase 2: Possible Component Lists

Action to Take/Effect on Travel List

MERGE RIGHT	FORM X LINES RIGHT
DETOUR NEXT X EXITS	USE XXXXX RD EXIT
USE EXIT XXX	USE EXIT I-XX NORTH
STAY ON US XXX SOUTH	USE I-XX E TO I-XX N
TRUCKS USE US XXX N	WATCH FOR TRUCKS
WATCH FOR TRUCKS	EXPECT DELAYS
EXPECT DELAYS	PREPARE TO STOP
REDUCE SPEED XXX FT	END SHOULDER USE
USE OTHER ROUTES	WATCH FOR WORKERS
STAY IN LANE *	

Location List

AT FM XXXX
BEFORE RAILROAD CROSSING
NEXT X MILES
PAST US XXX EXIT
XXXXXXX TO XXXXXXX
US XXX TO FM XXXX

Warning List

SPEED LIMIT XX MPH
MAXIMUM SPEED XX MPH
MINIMUM SPEED XX MPH
ADVISORY SPEED XX MPH
RIGHT LANE EXIT
USE CAUTION
DRIVE SAFELY
DRIVE WITH CARE

** Advance Notice List

TUE-FRI XX AM- X PM
APR XX- XX X PM-X AM
BEGINS MONDAY
BEGINS MAY XX
MAY X-X XX PM - XX AM
NEXT FRI-SUN
XX AM TO XX PM
NEXT TUE AUG XX
TONIGHT XX PM- XX AM

** See Application Guidelines Note 6.

APPLICATION GUIDELINES

1. Only 1 or 2 phases are to be used on a PCMS.
2. The 1st phase (or both) should be selected from the "Road/Lane/Ramp Closure List" and the "Other Condition List".
3. A 2nd phase can be selected from the "Action to Take/Effect on Travel, Location, General Warning, or Advance Notice Phase Lists".
4. A Location Phase is necessary only if a distance or location is not included in the first phase selected.
5. If two PCMS are used in sequence, they must be separated by a minimum of 1000 ft. Each PCMS shall be limited to two phases, and should be understandable by themselves.
6. For advance notice, when the current date is within seven days of the actual work date, calendar days should be replaced with days of the week. Advance notification should typically be for no more than one week prior to the work.

WORDING ALTERNATIVES

1. The words RIGHT, LEFT and ALL can be interchanged as appropriate.
2. Roadway designations IH, US, SH, FM and LP can be interchanged as appropriate.
3. EAST, WEST, NORTH and SOUTH (or abbreviations E, W, N and S) can be interchanged as appropriate.
4. Highway names and numbers replaced as appropriate.
5. ROAD, HIGHWAY and FREEWAY can be interchanged as needed.
6. AHEAD may be used instead of distances if necessary.
7. FT and MI, MILE and MILES interchanged as appropriate.
8. AT, BEFORE and PAST interchanged as needed.
9. Distances or AHEAD can be eliminated from the message if a location phase is used.

PCMS SIGNS WITHIN THE R.O.W. SHALL BE BEHIND GUARDRAIL OR CONCRETE BARRIER OR SHALL HAVE A MINIMUM OF FOUR (4) PLASTIC DRUMS PLACED PERPENDICULAR TO TRAFFIC ON THE UPSTREAM SIDE OF THE PCMS, WHEN EXPOSED TO ONE DIRECTION OF TRAFFIC. WHEN EXPOSED TO TWO WAY TRAFFIC, THE FOUR DRUMS SHOULD BE PLACED WITH ONE DRUM AT EACH OF THE FOUR CORNERS OF THE UNIT.

FULL MATRIX PCMS SIGNS

1. When Full Matrix PCMS signs are used, the character height and legibility/visibility requirements shall be maintained as listed in Note 15 under "PORTABLE CHANGEABLE MESSAGE SIGNS" above.
2. When symbol signs, such as the "Flagger Symbol"(CW20-7) are represented graphically on the Full Matrix PCMS sign and, with the approval of the Engineer, it shall maintain the legibility/visibility requirement listed above.
3. When symbol signs are represented graphically on the Full Matrix PCMS, they shall only supplement the use of the static sign represented, and shall not substitute for, or replace that sign.
4. A full matrix PCMS may be used to simulate a flashing arrow board provided it meets the visibility, flash rate and dimming requirements on BC(7), for the same size arrow.

Texas Department of Transportation — Traffic Safety Division Standard

BARRICADE AND CONSTRUCTION PORTABLE CHANGEABLE MESSAGE SIGN (PCMS)

BC(6)-21

FILE: bc-21.dgn	DN: TxDOT	CK: TxDOT	DW: TxDOT	CK: TxDOT
© TxDOT November 2002	CONT	SECT	JOB	HIGHWAY
REVISIONS				VARIOUS
9-07 8-14	DIST		COUNTY	SHEET NO.
7-13 5-21			DENTON	16

DISCLAIMER:
The use of this standard is governed by the "Texas Engineering Practice Act". No warranty of any kind is made by TxDOT for any purpose whatsoever. TxDOT assumes no responsibility for the conversion of this standard to other formats or for incorrect results or damages resulting from its use.

DATE: 10/16/2025 3:45:29 PM
FILE: S:\WHOU-Tran\5482\5482-2401\400 Production\4 - Design\Plan Set\2. TCP\Standards\TxDOT\bc-21.dgn

1. Barrier Reflectors shall be pre-qualified, and conform to the color and reflectivity requirements of DMS-8600. A list of prequalified Barrier Reflectors can be found at the Material Producer List web address shown on BC(1).
2. Color of Barrier Reflectors shall be as specified in the TMUTCD. The cost of the reflectors shall be considered subsidiary to Item 512.

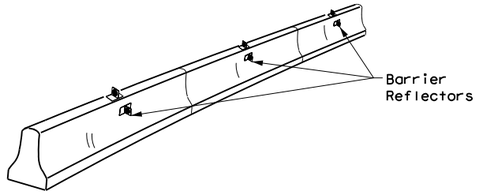

CONCRETE TRAFFIC BARRIER (CTB)

3. Where traffic is on one side of the CTB, two (2) Barrier Reflectors shall be mounted in approximately the midsection of each section of CTB. An alternate mounting location is uniformly spaced at one end of each CTB. This will allow for attachment of a barrier grapple without damaging the reflector. The Barrier Reflector mounted on the side of the CTB shall be located directly below the reflector mounted on top of the barrier, as shown in the detail above.
4. Where CTB separates two-way traffic, three barrier reflectors shall be mounted on each section of CTB. The reflector unit on top shall have two yellow reflective faces (Bi-Directional)while the reflectors on each side of the barrier shall have one yellow reflective face, as shown in the detail above.
5. When CTB separates traffic traveling in the same direction, no barrier reflectors will be required on top of the CTB.
6. Barrier Reflector units shall be yellow or white in color to match the edgeline being supplemented.
7. Maximum spacing of Barrier Reflectors is forty (40) feet.
8. Pavement markers or temporary flexible-reflective roadway marker tabs shall NOT be used as CTB delineation.
9. Attachment of Barrier Reflectors to CTB shall be per manufacturer's recommendations.
10. Missing or damaged Barrier Reflectors shall be replaced as directed by the Engineer.
11. Single slope barriers shall be delineated as shown on the above detail.

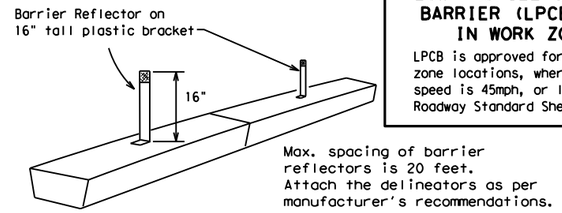

LOW PROFILE CONCRETE BARRIER (LPCB) USED IN WORK ZONES

LPCB is approved for use in work zone locations, where the posted speed is 45mph, or less. See Roadway Standard Sheet LPCB.

LOW PROFILE CONCRETE BARRIER (LPCB)

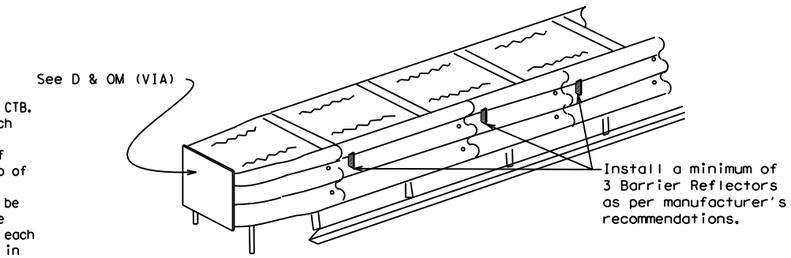

DELINEATION OF END TREATMENTS

END TREATMENTS FOR CTB'S USED IN WORK ZONES

End treatments used on CTB's in work zones shall meet the apppropriate crashworthy standards as defined in the Manual for Assessing Safety Hardware (MASH). Refer to the CWZTCD List for approved end treatments and manufacturers.

BARRIER REFLECTORS FOR CONCRETE TRAFFIC BARRIER AND ATTENUATORS

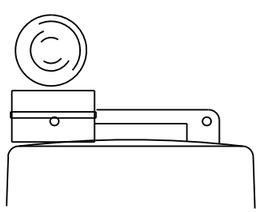

Type C Warning Light or approved substitute mounted on a drum adjacent to the travel way.

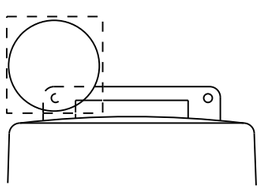

Warning reflector may be round or square.Must have a yellow reflective surface area of at least 30 square inches

WARNING LIGHTS

1. Warning lights shall meet the requirements of the TMUTCD.
2. Warning lights shall NOT be installed on barricades.
3. Type A-Low Intensity Flashing Warning Lights are commonly used with drums. They are intended to warn of or mark a potentially hazardous area. Their use shall be as indicated on this sheet and/or other sheets of the plans by the designation "FL". The Type A Warning Lights shall not be used with signs manufactured with Type B_{FL} or C_{FL} Sheeting meeting the requirements of Departmental Material Specification DMS-8300.
4. Type-C and Type D 360 degree Steady Burn Lights are intended to be used in a series for delineation to supplement other traffic control devices. Their use shall be as indicated on this sheet and/or other sheets of the plans by the designation "SB".
5. The Engineer/Inspector or the plans shall specify the location and type of warning lights to be installed on the traffic control devices.
6. When required by the Engineer, the Contractor shall furnish a copy of the warning lights certification. The warning light manufacturer will certify the warning lights meet the requirements of the latest ITE Purchase Specifications for Flashing and Steady-Burn Warning Lights.
7. When used to delineate curves, Type-C and Type D Steady Burn Lights should only be placed on the outside of the curve, not the inside.
8. The location of warning lights and warning reflectors on drums shall be as shown elsewhere in the plans.

WARNING LIGHTS MOUNTED ON PLASTIC DRUMS

1. Type A flashing warning lights are intended to warn drivers that they are approaching or are in a potentially hazardous area.
2. Type A random flashing warning lights are not intended for delineation and shall not be used in a series.
3. A series of sequential flashing warning lights placed on channelizing devices to form a merging taper may be used for delineation. If used, the successive flashing of the sequential warning lights should occur from the beginning of the taper to the end of the merging taper in order to identify the desired vehicle path. The rate of flashing for each light shall be 65 flashes per minute, plus or minus 10 flashes.
4. Type C and D steady-burn warning lights are intended to be used in a series to delineate the edge of the travel lane on detours, on lane changes, on lane closures, and on other similar conditions.
5. Type A, Type C and Type D warning lights shall be installed at locations as detailed on other sheets in the plans.
6. Warning lights shall not be installed on a drum that has a sign, chevron or vertical panel.
7. The maximum spacing for warning lights on drums should be identical to the channelizing device spacing.

WARNING REFLECTORS MOUNTED ON PLASTIC DRUMS AS A SUBSTITUTE FOR TYPE C (STEADY BURN) WARNING LIGHTS

1. A warning reflector or approved substitute may be mounted on a plastic drum as a substitute for a Type C, steady burn warning light at the discretion of the Contractor unless otherwise noted in the plans.
2. The warning reflector shall be yellow in color and shall be manufactured using a sign substrate approved for use with plastic drums listed on the CWZTCD.
3. The warning reflector shall have a minimum retroreflective surface area (one-side) of 30 square inches.
4. Round reflectors shall be fully reflectorized, including the area where attached to the drum.
5. Square substrates must have a minimum of 30 square inches of reflectorized sheeting. They do not have to be reflectorized where it attaches to the drum.
6. The side of the warning reflector facing approaching traffic shall have sheeting meeting the color and retroreflectivity requirements for DMS 8300-Type B or Type C.
7. When used near two-way traffic, both sides of the warning reflector shall be reflectorized.
8. The warning reflector should be mounted on the side of the handle nearest approaching traffic.
9. The maximum spacing for warning reflectors should be identical to the channelizing device spacing requirements.

Arrow Boards may be located behind channelizing devices in place for a shoulder taper or merging taper, otherwise they shall be delineated with four (4) channelizing devices placed perpendicular to traffic on the upstream side of traffic.

1. The Flashing Arrow Board should be used for all lane closures on multi-lane roadways, or slow moving maintenance or construction activities on the travel lanes.
2. Flashing Arrow Boards should not be used on two-lane, two-way roadways, detours, diversions or work on shoulders unless the "CAUTION" display (see detail below) is used.
3. The Engineer/Inspector shall choose all appropriate signs, barricades and/or other traffic control devices that should be used in conjunction with the Flashing Arrow Board.
4. The Flashing Arrow Board should be able to display the following symbols:

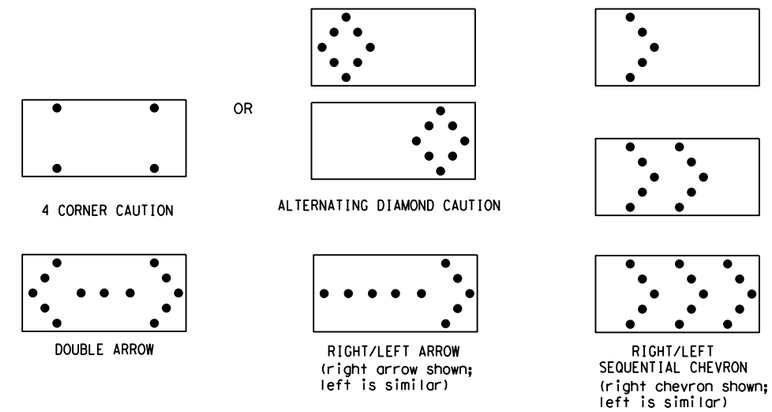

5. The "CAUTION" display consists of four corner lamps flashing simultaneously, or the Alternating Diamond Caution mode as shown.
6. The straight line caution display is NOT ALLOWED.
7. The Flashing Arrow Board shall be capable of minimum 50 percent dimming from rated lamp voltage. The flashing rate of the lamps shall not be less than 25 nor more than 40 flashes per minute.
8. Minimum lamp "on time" shall be approximately 50 percent for the flashing arrow and equal intervals of 25 percent for each sequential phase of the flashing chevron.
9. The sequential arrow display is NOT ALLOWED.
10. The flashing arrow display is the TxDOT standard; however, the sequential chevron display may be used during daylight operations.
11. The Flashing Arrow Board shall be mounted on a vehicle, trailer or other suitable support.
12. A Flashing Arrow Board SHALL NOT BE USED to laterally shift traffic.
13. A full matrix PCMS may be used to simulate a Flashing Arrow Board provided it meets visibility, flash rate and dimming requirements on this sheet for the same size arrow.
14. Minimum mounting height of trailer mounted Arrow Boards should be 7 feet from roadway to bottom of panel.

REQUIREMENTS

TYPE	MINIMUM SIZE	MINIMUM NUMBER OF PANEL LAMPS	MINIMUM VISIBILITY DISTANCE
B	30 x 60	13	3/4 mile
C	48 x 96	15	1 mile

ATTENTION

Flashing Arrow Boards shall be equipped with automatic dimming devices.

WHEN NOT IN USE, REMOVE THE ARROW BOARD FROM THE RIGHT-OF-WAY OR PLACE THE ARROW BOARD BEHIND CONCRETE TRAFFIC BARRIER OR GUARDRAIL.

FLASHING ARROW BOARDS

SHEET 7 OF 12

TRUCK-MOUNTED ATTENUATORS

1. Truck-mounted attenuators (TMA) used on TxDOT facilities must meet the requirements outlined in the Manual for Assessing Safety Hardware (MASH).
2. Refer to the CWZTCD for the requirements of Level 2 or Level 3 TMAs.
3. Refer to the CWZTCD for a list of approved TMAs.
4. TMAs are required on freeways unless otherwise noted in the plans.
5. A TMA should be used anytime that it can be positioned 30 to 100 feet in advance of the area of crew exposure without adversely affecting the work performance.
6. The only reason a TMA should not be required is when a work area is spread down the roadway and the work crew is an extended distance from the TMA.

Texas Department of Transportation — Traffic Safety Division Standard

BARRICADE AND CONSTRUCTION ARROW PANEL, REFLECTORS, WARNING LIGHTS & ATTENUATOR

BC(7)-21

FILE: bc-21.dgn	DN: TxDOT	CK: TxDOT	DW: TxDOT	CK: TxDOT
© TxDOT November 2002	CONT	SECT	JOB	HIGHWAY
REVISIONS				VARIOUS
9-07 8-14	DIST		COUNTY	SHEET NO.
7-13 5-21			DENTON	17

101

DISCLAIMER:
The use of this standard is governed by the "Texas Engineering Practice Act". No warranty of any kind is made by TxDOT for any purpose whatsoever. TxDOT assumes no responsibility for the conversion of this standard to other formats or for incorrect results or damages resulting from its use.

DATE: 10/16/2025 3:45:29 PM
FILE: S:\WHOU-Tran\5482\5482-2401\400 Production\4 - Design\Plan Set\2. TCP\Standards\TxDOT\bc-21.dgn

DISCLAIMER:
The use of this standard is governed by the "Texas Engineering Practice Act". No warranty of any kind is made by TxDOT for any purpose whatsoever. TxDOT assumes no responsibility for the conversion of this standard to other formats or for incorrect results or damages resulting from its use.

DATE: 10/16/2025 3:45:30 PM
FILE: S:\WHOU-Tran\5482\5482-2401\400 Production\4 - Design\Plan Set\2. TCP\Standards\TxDOT\bc-21.dgn

GENERAL NOTES

1. For long term stationary work zones on freeways, drums shall be used as the primary channelizing device.
2. For intermediate term stationary work zones on freeways, drums should be used as the primary channelizing device but may be replaced in tangent sections by vertical panels, or 42" two-piece cones. In tangent sections, one-piece cones may be used with the approval of the Engineer but only if personnel are present on the project at all times to maintain the cones in proper position and location.
3. For short term stationary work zones on freeways, drums are the preferred channelizing device but may be replaced in tapers, transitions and tangent sections by vertical panels, two-piece cones or one-piece cones as approved by the Engineer.
4. Drums and all related items shall comply with the requirements of the current version of the "Texas Manual on Uniform Traffic Control Devices" (TMUTCD) and the "Compliant Work Zone Traffic Control Devices List" (CWZTCD).
5. Drums, bases, and related materials shall exhibit good workmanship and shall be free from objectionable marks or defects that would adversely affect their appearance or serviceability.
6. The Contractor shall have a maximum of 24 hours to replace any plastic drums identified for replacement by the Engineer/Inspector. The replacement device must be an approved device.

GENERAL DESIGN REQUIREMENTS

Pre-qualified plastic drums shall meet the following requirements:

1. Plastic drums shall be a two-piece design; the "body" of the drum shall be the top portion and the "base" shall be the bottom.
2. The body and base shall lock together in such a manner that the body separates from the base when impacted by a vehicle traveling at a speed of 20 MPH or greater but prevents accidental separation due to normal handling and/or air turbulence created by passing vehicles.
3. Plastic drums shall be constructed of lightweight flexible, and deformable materials. The Contractor shall NOT use metal drums or single piece plastic drums as channelization devices or sign supports.
4. Drums shall present a profile that is a minimum of 18 inches in width at the 36 inch height when viewed from any direction. The height of drum unit (body installed on base) shall be a minimum of 36 inches and a maximum of 42 inches.
5. The top of the drum shall have a built-in handle for easy pickup and shall be designed to drain water and not collect debris. The handle shall have a minimum of two widely spaced 9/16 inch diameter holes to allow attachment of a warning light, warning reflector unit or approved compliant sign.
6. The exterior of the drum body shall have a minimum of four alternating orange and white retroreflective circumferential stripes not less than 4 inches nor greater than 8 inches in width. Any non-reflectorized space between any two adjacent stripes shall not exceed 2 inches in width.
7. Bases shall have a maximum width of 36 inches, a maximum height of 4 inches, and a minimum of two footholds of sufficient size to allow base to be held down while separating the drum body from the base.
8. Plastic drums shall be constructed of ultra-violet stabilized, orange, high-density polyethylene (HDPE) or other approved material.
9. Drum body shall have a maximum unballasted weight of 11 lbs.
10. Drum and base shall be marked with manufacturer's name and model number.

RETROREFLECTIVE SHEETING

1. The stripes used on drums shall be constructed of sheeting meeting the color and retroreflectivity requirements of Departmental Materials Specification DMS-8300, "Sign Face Materials," Type A or Type B reflective sheeting shall be supplied unless otherwise specified in the plans.
2. The sheeting shall be suitable for use on and shall adhere to the drum surface such that, upon vehicular impact, the sheeting shall remain adhered in-place and exhibit no delaminating, cracking, or loss of retroreflectivity other than that loss due to abrasion of the sheeting surface.

BALLAST

1. Unballasted bases shall be large enough to hold up to 50 lbs. of sand. This base, when filled with the ballast material, should weigh between 35 lbs (minimum) and 50 lbs (maximum). The ballast may be sand in one to three sandbags separate from the base, sand in a sand-filled plastic base, or other ballasting devices as approved by the Engineer. Stacking of sandbags will be allowed, however height of sandbags above pavement surface may not exceed 12 inches.
2. Bases with built-in ballast shall weigh between 40 lbs. and 50 lbs. Built-in ballast can be constructed of an integral crumb rubber base or a solid rubber base.
3. Recycled truck tire sidewalls may be used for ballast on drums approved for this type of ballast on the CWZTCD list.
4. The ballast shall not be heavy objects, water, or any material that would become hazardous to motorists, pedestrians, or workers when the drum is struck by a vehicle.
5. When used in regions susceptible to freezing, drums shall have drainage holes in the bottoms so that water will not collect and freeze becoming a hazard when struck by a vehicle.
6. Ballast shall not be placed on top of drums.
7. Adhesives may be used to secure base of drums to pavement.

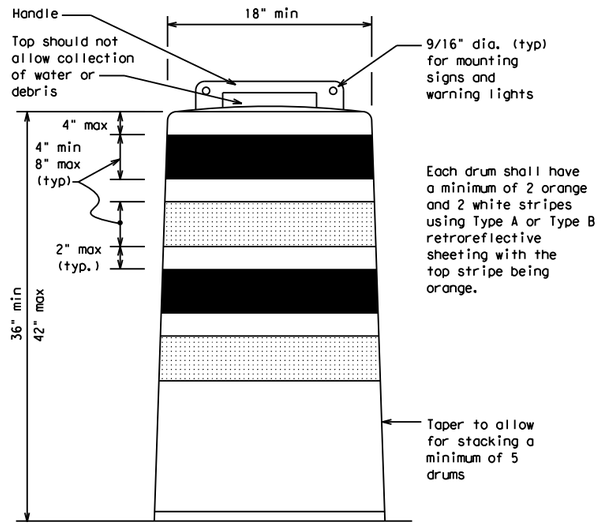

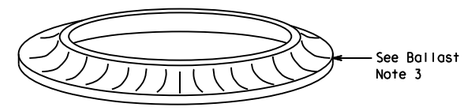

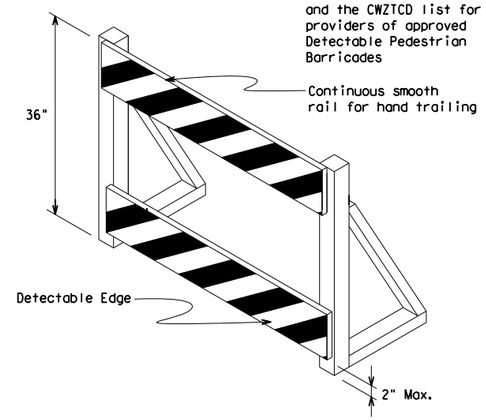

DETECTABLE PEDESTRIAN BARRICADES

1. When existing pedestrian facilities are disrupted, closed, or relocated in a TTC zone, the temporary facilities shall be detectable and include accessibility features consistent with the features present in the existing pedestrian facility. Refer to WZ(BTS-2) for Pedestrian Control requirements for Sidewalk Diversions, Sidewalk Detours and Crosswalk Closures.
2. Where pedestrians with visual disabilities normally use the closed sidewalk, a Detectable Pedestrian Barricade shall be placed across the full width of the closed sidewalk instead of a Type 3 Barricade.
3. Detectable pedestrian barricades similar to the one pictured above, longitudinal channelizing devices, some concrete barriers, and wood or chain link fencing with a continuous detectable edging can satisfactorily delineate a pedestrian path.
4. Tape, rope, or plastic chain strung between devices are not detectable, do not comply with the design standards in the "Americans with Disabilities Act Accessibility Guidelines (ADAAG)" and should not be used as a control for pedestrian movements.
5. Warning lights shall not be attached to detectable pedestrian barricades.
6. Detectable pedestrian barricades should use 8" nominal barricade rails as shown on BC(10) provided that the top rail provides a smooth continuous rail suitable for hand trailing with no splinters, burrs, or sharp edges.

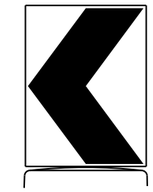

18" x 24" Sign
(Maximum Sign Dimension)
Chevron CW1-8, Opposing Traffic Lane Divider, Driveway sign D70a, Keep Right R4 series or other signs as approved by Engineer

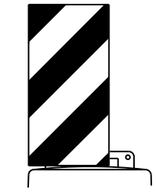

12" x 24"
Vertical Panel
mount with diagonals sloping down towards travel way

Plywood, Aluminum or Metal sign substrates shall NOT be used on plastic drums

SIGNS, CHEVRONS, AND VERTICAL PANELS MOUNTED ON PLASTIC DRUMS

1. Signs used on plastic drums shall be manufactured using substrates listed on the CWZTCD.
2. Chevrons and other work zone signs with an orange background shall be manufactured with Type B_{FL} or Type C_{FL} Orange sheeting meeting the color and retroreflectivity requirements of DMS-8300, "Sign Face Material," unless otherwise specified in the plans.
3. Vertical Panels shall be manufactured with orange and white sheeting meeting the requirements of DMS-8300 Type A or Type B. Diagonal stripes on Vertical Panels shall slope down toward the intended traveled lane.
4. Other sign messages (text or symbolic) may be used as approved by the Engineer. Sign dimensions shall not exceed 18 inches in width or 24 inches in height, except for the R9 series signs discussed in note 8 below.
5. Signs shall be installed using a 1/2 inch bolt (nominal) and nut, two washers, and one locking washer for each connection.
6. Mounting bolts and nuts shall be fully engaged and adequately torqued. Bolts should not extend more than 1/2 inch beyond nuts.
7. Chevrons may be placed on drums on the outside of curves, on merging tapers or on shifting tapers. When used in these locations, they may be placed on every drum or spaced not more than on every third drum. A minimum of three (3) should be used at each location called for in the plans.
8. R9-9, R9-10, R9-11 and R9-11a Sidewalk Closed signs which are 24 inches wide may be mounted on plastic drums, with approval of the Engineer.

Texas Department of Transportation — Traffic Safety Division Standard

BARRICADE AND CONSTRUCTION CHANNELIZING DEVICES

BC(8)-21

FILE: bc-21.dgn	DN: TxDOT	CK: TxDOT	DW: TxDOT	CK: TxDOT
© TxDOT November 2002	CONT	SECT	JOB	HIGHWAY
REVISIONS 4-03 8-14, 9-07 5-21, 7-13				VARIOUS
	DIST	COUNTY		SHEET NO.
		DENTON		18

DISCLAIMER:
The use of this standard is governed by the "Texas Engineering Practice Act". No warranty of any kind is made by TxDOT for any purpose whatsoever. TxDOT assumes no responsibility for the conversion of this standard to other formats or for incorrect results or damages resulting from its use.

DATE: 10/16/2025 3:45:31 PM
FILE: S:\WHOU-Tran\5482\5482-2401\400 Production\4 - Design\Plan Set\2. TCP\Standards\TxDOT\bc-21.dgn

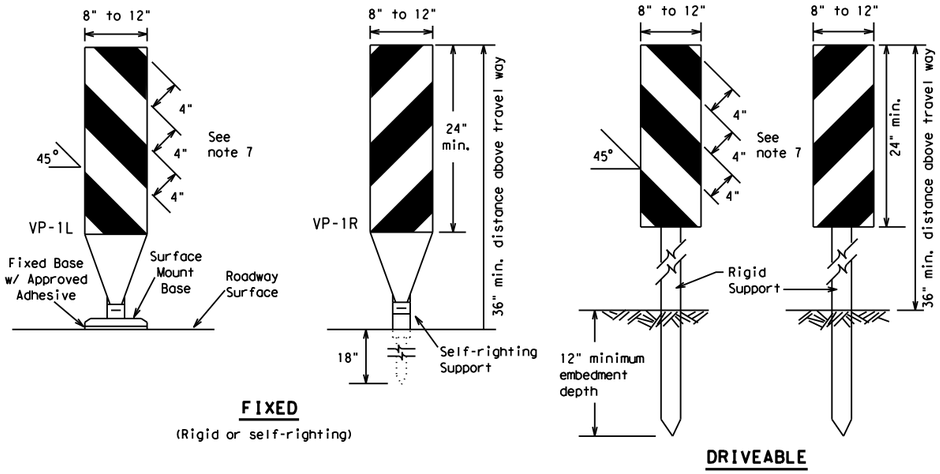

FIXED

(Rigid or self-righting)

DRIVEABLE

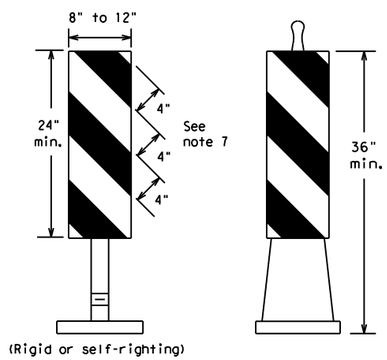

(Rigid or self-righting)

PORTABLE

1. Vertical Panels (VP's) are normally used to channelize traffic or divide opposing lanes of traffic.
2. VP's may be used in daytime or nighttime situations. They may be used at the edge of shoulder drop-offs and other areas such as lane transitions where positive daytime and nighttime delineation is required. The Engineer/Inspector shall refer to the Roadway Design Manual for additional requirements on the use VP's for drop-offs.
3. VP's should be mounted back to back if used at the edge of cuts adjacent to two-way two lane roadways. Stripes are to be reflective orange and reflective white and should always slope downward toward the travel lane.
4. VP's used on expressways and freeways or other high speed roadways, may have more than 270 square inches of retroreflective area facing traffic.
5. Self-righting supports are available with portable base. See "Compliant Work Zone Traffic Control Devices List" (CWZTCD).
6. Sheeting for the VP's shall be retroreflective Type A or Type B conforming to Departmental Material Specification DMS-8300, unless noted otherwise.
7. Where the height of reflective material on the vertical panel is 36 inches or greater, a panel stripe of 6 inches shall be used.

VERTICAL PANELS (VPs)

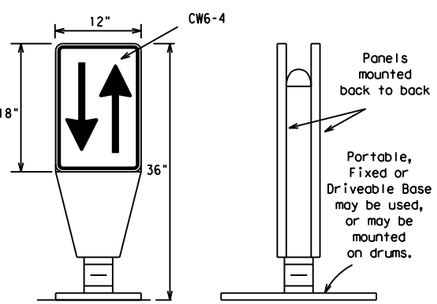

1. Opposing Traffic Lane Dividers (OTLD) are delineation devices designed to convert a normal one-way roadway section to two-way operation. OTLD's are used on temporary centerlines. The upward and downward arrows on the sign's face indicate the direction of traffic on either side of the divider. The base is secured to the pavement with an adhesive or rubber weight to minimize movement caused by a vehicle impact or wind gust.
2. The OTLD may be used in combination with 42" cones or VPs.
3. Spacing between the OTLD shall not exceed 500 feet. 42" cones or VPs placed between the OTLD's should not exceed 100 foot spacing.
4. The OTLD shall be orange with a black non-reflective legend. Sheeting for the OTLD shall be retroreflective Type B_{FL} or Type C_{FL} conforming to Departmental Material Specification DMS-8300, unless noted otherwise. The legend shall meet the requirements of DMS-8300.

OPPOSING TRAFFIC LANE DIVIDERS (OTLD)

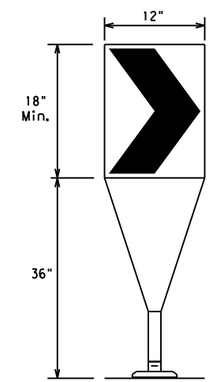

Fixed Base w/ Approved Adhesive (Driveable Base, or Flexible Support can be used)

1. The chevron shall be a vertical rectangle with a minimum size of 12 by 18 inches.
2. Chevrons are intended to give notice of a sharp change of alignment with the direction of travel and provide additional emphasis and guidance for vehicle operators with regard to changes in horizontal alignment of the roadway.
3. Chevrons, when used, shall be erected on the outside of a sharp curve or turn, or on the far side of an intersection. They shall be in line with and at right angles to approaching traffic. Spacing should be such that the motorist always has three in view, until the change in alignment eliminates its need.
4. To be effective, the chevron should be visible for at least 500 feet.
5. Chevrons shall be orange with a black nonreflective legend. Sheeting for the chevron shall be retroreflective Type B_{FL} or Type C_{FL} conforming to Departmental Material Specification DMS-8300, unless noted otherwise. The legend shall meet the requirements of DMS-8300.
6. For Long Term Stationary use on tapers or transitions on freeways and divided highways, self-righting chevrons may be used to supplement plastic drums but not to replace plastic drums.

CHEVRONS

GENERAL NOTES

1. Work Zone channelizing devices illustrated on this sheet may be installed in close proximity to traffic and are suitable for use on high or low speed roadways. The Engineer/Inspector shall ensure that spacing and placement is uniform and in accordance with the "Texas Manual on Uniform Traffic Control Devices" (TMUTCD).
2. Channelizing devices shown on this sheet may have a driveable, fixed or portable base. The requirement for self-righting channelizing devices must be specified in the General Notes or other plan sheets.
3. Channelizing devices on self-righting supports should be used in work zone areas where channelizing devices are frequently impacted by errant vehicles or vehicle related wind gusts making alignment of the channelizing devices difficult to maintain. Locations of these devices shall be detailed elsewhere in the plans. These devices shall conform to the TMUTCD and the "Compliant Work Zone Traffic Control Devices List" (CWZTCD).
4. The Contractor shall maintain devices in a clean condition and replace damaged, nonreflective, faded, or broken devices and bases as required by the Engineer/Inspector. The Contractor shall be required to maintain proper device spacing and alignment.
5. Portable bases shall be fabricated from virgin and/or recycled rubber. The portable bases shall weigh a minimum of 30 lbs.
6. Pavement surfaces shall be prepared in a manner that ensures proper bonding between the adhesives, the fixed mount bases and the pavement surface. Adhesives shall be prepared and applied according to the manufacturer's recommendations.
7. The installation and removal of channelizing devices shall not cause detrimental effects to the final pavement surfaces, including pavement surface discoloration or surface integrity. Driveable bases shall not be permitted on final pavement surfaces. The Engineer/Inspector shall approve all application and removal procedures of fixed bases.

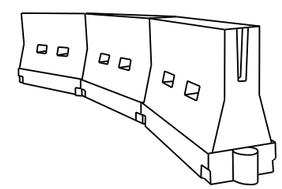

LONGITUDINAL CHANNELIZING DEVICES (LCD)

1. LCDs are crashworthy, lightweight, deformable devices that are highly visible, have good target value and can be connected together. They are not designed to contain or redirect a vehicle on impact.
2. LCDs may be used instead of a line of cones or drums.
3. LCDs shall be placed in accordance to application and installation requirements specific to the device, and used only when shown on the CWZTCD list.
4. LCDs should not be used to provide positive protection for obstacles, pedestrians or workers.
5. LCDs shall be supplemented with retroreflective delineation as required for temporary barriers on BC(7) when placed roughly parallel to the travel lanes.
6. LCDs used as barricades placed perpendicular to traffic should have at least one row of reflective sheeting meeting the requirements for barricade rails as shown on BC(10). Place reflective sheeting near the top of the LCD along the full length of the device.

WATER BALLASTED SYSTEMS USED AS BARRIERS

1. Water ballasted systems used as barriers shall not be used solely to channelize road users, but also to protect the work space per the appropriate Manual for Assessing Safety Hardware (MASH) crashworthiness requirements based on roadway speed and barrier application.
2. Water ballasted systems used to channelize vehicular traffic shall be supplemented with retroreflective delineation or channelizing devices to improve daytime/nighttime visibility. They may also be supplemented with pavement markings.
3. Water ballasted systems used as barriers shall be placed in accordance to application and installation requirements specific to the device, and used only when shown on the CWZTCD list.
4. Water ballasted systems used as barriers should not be used for a merging taper except in low speed (less than 45 MPH) urban areas. When used on a taper in a low speed urban area, the taper shall be delineated and the taper length should be designed to optimize road user operations considering the available geometric conditions.
5. When water ballasted systems used as barriers have blunt ends exposed to traffic, they should be attenuated as per manufacturer recommendations or flared to a point outside the clear zone.

If used to channelize pedestrians, longitudinal channelizing devices or water ballasted systems must have a continuous detectable bottom for users of long canes and the top of the unit shall not be less than 32 inches in height.

HOLLOW OR WATER BALLASTED SYSTEMS USED AS LONGITUDINAL CHANNELIZING DEVICES OR BARRIERS

Posted Speed	Formula	Minimum Desirable Taper Lengths ✱✱			Suggested Maximum Spacing of Channelizing Devices	
		10' Offset	11' Offset	12' Offset	On a Taper	On a Tangent
30	$L = \frac{WS^2}{60}$	150'	165'	180'	30'	60'
35		205'	225'	245'	35'	70'
40		265'	295'	320'	40'	80'
45	L = WS	450'	495'	540'	45'	90'
50		500'	550'	600'	50'	100'
55		550'	605'	660'	55'	110'
60		600'	660'	720'	60'	120'
65		650'	715'	780'	65'	130'
70		700'	770'	840'	70'	140'
75		750'	825'	900'	75'	150'
80		800'	880'	960'	80'	160'

✱✱ Taper lengths have been rounded off.
L=Length of Taper (FT.) W=Width of Offset (FT.)
S=Posted Speed (MPH)

SUGGESTED MAXIMUM SPACING OF CHANNELIZING DEVICES AND MINIMUM DESIRABLE TAPER LENGTHS

Texas Department of Transportation — Traffic Safety Division Standard

BARRICADE AND CONSTRUCTION CHANNELIZING DEVICES

BC(9)-21

FILE: bc-21.dgn	DN: TxDOT	CK: TxDOT	DW: TxDOT	CK: TxDOT
© TxDOT November 2002	CONT	SECT	JOB	HIGHWAY
REVISIONS				VARIOUS
9-07 8-14	DIST		COUNTY	SHEET NO.
7-13 5-21			DENTON	19

TYPE 3 BARRICADES

1. Refer to the Compliant Work Zone Traffic Control Devices List (CWZTCD) for details of the Type 3 Barricades and a list of all materials used in the construction of Type 3 Barricades.
2. Type 3 Barricades shall be used at each end of construction projects closed to all traffic.
3. Barricades extending across a roadway should have stripes that slope downward in the direction toward which traffic must turn in detouring. When both right and left turns are provided, the chevron striping may slope downward in both directions from the center of the barricade. Where no turns are provided at a closed road, striping should slope downward in both directions toward the center of roadway.
4. Striping of rails, for the right side of the roadway, should slope downward to the left. For the left side of the roadway, striping should slope downward to the right.
5. Identification markings may be shown only on the back of the barricade rails. The maximum height of letters and/or company logos used for identification shall be 1".
6. Barricades shall not be placed parallel to traffic unless an adequate clear zone is provided.
7. Warning lights shall NOT be installed on barricades.
8. Where barricades require the use of weights to keep from turning over, the use of sandbags with dry, cohesionless sand is recommended. The sandbags will be tied shut to keep the sand from spilling and to maintain a constant weight. Sand bags shall not be stacked in a manner that covers any portion of a barricade rails reflective sheeting. Rock, concrete, iron, steel or other solid objects will NOT be permitted. Sandbags should weigh a minimum of 35 lbs and a maximum of 50 lbs. Sandbags shall be made of a durable material that tears upon vehicular impact. Rubber (such as tire inner tubes) shall not be used for sandbags. Sandbags shall only be placed along or upon the base supports of the device and shall not be suspended above ground level or hung with rope, wire, chains or other fasteners.
9. Sheeting for barricades shall be retroreflective Type A or Type B conforming to Departmental Material Specification DMS-8300 unless otherwise noted.

Barricades shall NOT be used as a sign support.

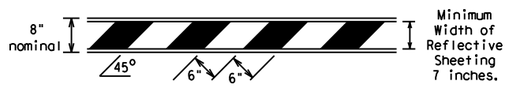

TYPICAL STRIPING DETAIL FOR BARRICADE RAIL

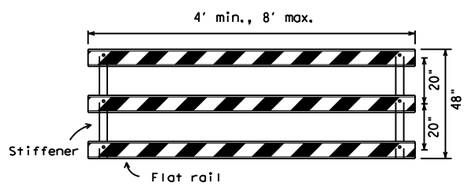

Stiffener may be inside or outside of support, but no more than 2 stiffeners shall be allowed on one barricade.

TYPICAL PANEL DETAIL FOR SKID OR POST TYPE BARRICADES

Each roadway of a divided highway shall be barricaded in the same manner.

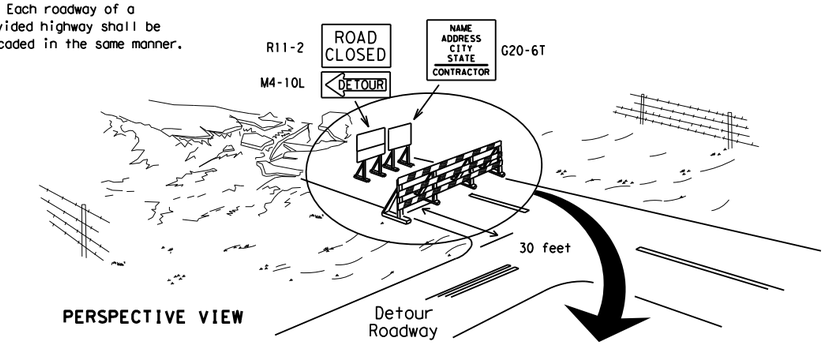

PERSPECTIVE VIEW

The three rails on Type 3 barricades shall be reflectorized orange and reflective white stripes on one side facing one-way traffic and both sides for two-way traffic.

Barricade striping should slant downward in the direction of detour.

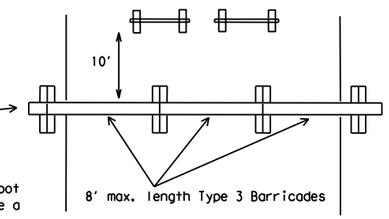

PLAN VIEW

1. Signs should be mounted on independent supports at a 7 foot mounting height in center of roadway. The signs should be a minimum of 10 feet behind Type 3 Barricades.
2. Advance signing shall be as specified elsewhere in the plans.

TYPE 3 BARRICADE (POST AND SKID) TYPICAL APPLICATION

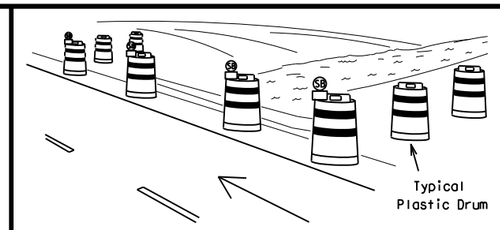

PERSPECTIVE VIEW

1. Where positive redirectional capability is provided, drums may be omitted.
2. Plastic construction fencing may be used with drums for safety as required in the plans.
3. Vertical Panels on flexible support may be substituted for drums when the shoulder width is less than 4 feet.
4. When the shoulder width is greater than 12 feet, steady-burn lights may be omitted if drums are used.
5. Drums must extend the length of the culvert widening.

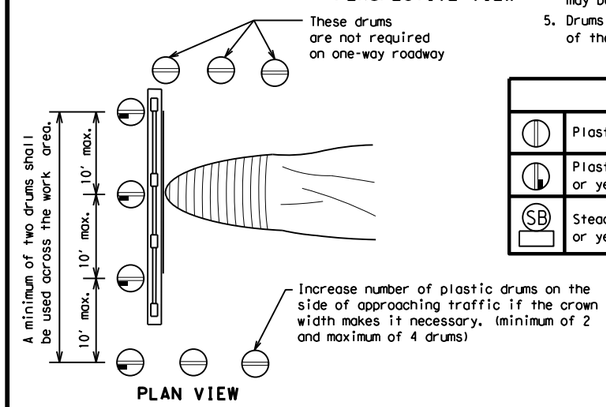

PLAN VIEW

LEGEND	
	Plastic drum
	Plastic drum with steady burn light or yellow warning reflector
SB	Steady burn warning light or yellow warning reflector

CULVERT WIDENING OR OTHER ISOLATED WORK WITHIN THE PROJECT LIMITS

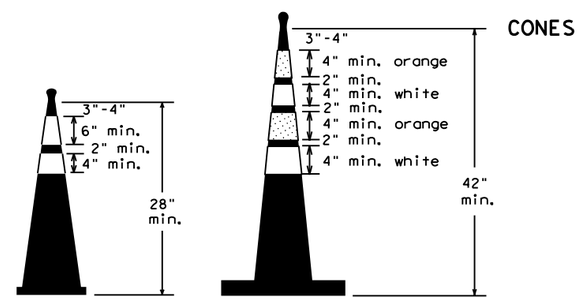

Two-Piece cones

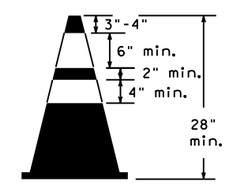

One-Piece cones

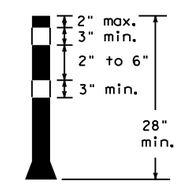

Tubular Marker

28" Cones shall have a minimum weight of 9 1/2 lbs.

42" 2-piece cones shall have a minimum weight of 30 lbs. including base.

1. Traffic cones and tubular markers shall be predominantly orange, and meet the height and weight requirements shown above.
2. One-piece cones have the body and base of the cone molded in one consolidated unit. Two-piece cones have a cone shaped body and a separate rubber base, or ballast, that is added to keep the device upright and in place.
3. Two-piece cones may have a handle or loop extending up to 8" above the minimum height shown, in order to aid in retrieving the device.
4. Cones or tubular markers shall have white or white and orange reflective bands as shown above. The reflective bands shall have a smooth, sealed outer surface and meet the requirements of Departmental Material Specification DMS-8300 Type A or Type B.
5. 28" cones and tubular markers are generally suitable for short duration and short-term stationary work as defined on BC(4). These should not be used for intermediate-term or long-term stationary work unless personnel is on-site to maintain them in their proper upright position.
6. 42" two-piece cones, vertical panels or drums are suitable for all work zone durations.
7. Cones or tubular markers used on each project should be of the same size and shape.

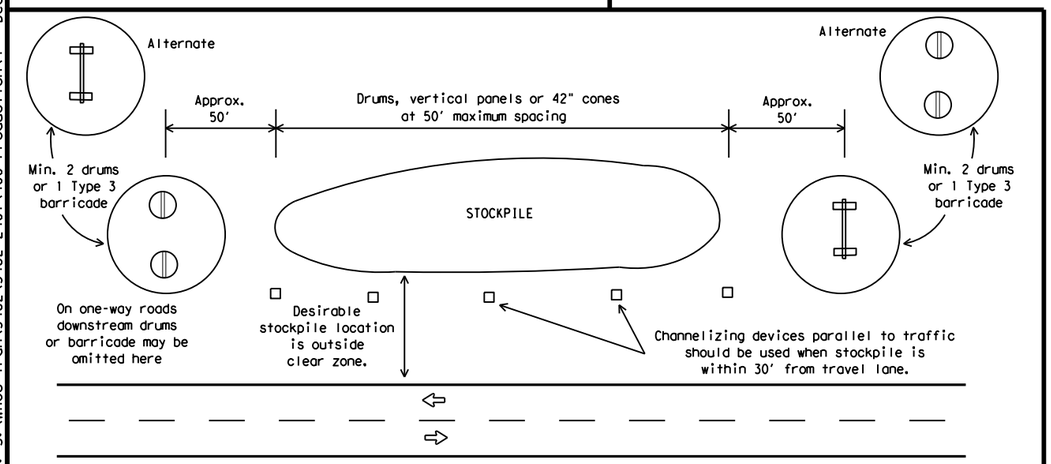

TRAFFIC CONTROL FOR MATERIAL STOCKPILES

SHEET 10 OF 12

Texas Department of Transportation — Traffic Safety Division Standard

BARRICADE AND CONSTRUCTION CHANNELIZING DEVICES

BC(10)-21

FILE: bc-21.dgn	DN: TxDOT	CK: TxDOT	DW: TxDOT	CK: TxDOT
© TxDOT November 2002	CONT	SECT	JOB	HIGHWAY
REVISIONS				VARIOUS
9-07 8-14	DIST		COUNTY	SHEET NO.
7-13 5-21			DENTON	20

104

DISCLAIMER:
The use of this standard is governed by the "Texas Engineering Practice Act". No warranty of any kind is made by TxDOT for any purpose whatsoever. TxDOT assumes no responsibility for the conversion of this standard to other formats or for incorrect results or damages resulting from its use.

DATE: 10/16/2025 3:45:33 PM
FILE: S:\WHOU-Tran\5482\5482-2401\400 Production\4 - Design\Plan Set\2. TCP\Standards\TxDOT\bc-21.dgn

DISCLAIMER:
The use of this standard is governed by the "Texas Engineering Practice Act". No warranty of any kind is made by TxDOT for any purpose whatsoever. TxDOT assumes no responsibility for the conversion of this standard to other formats or for incorrect results or damages resulting from its use.

DATE: 10/16/2025 3:45:33 PM
FILE: S:\WHOU-Tran\5482\5482-2401\400 Production\4 - Design\Plan Set\2. TCP\Standards\TxDOT\bc-21.dgn

WORK ZONE PAVEMENT MARKINGS

GENERAL

1. The Contractor shall be responsible for maintaining work zone and existing pavement markings, in accordance with the standard specifications and special provisions, on all roadways open to traffic within the CSJ limits unless otherwise stated in the plans.
2. Color, patterns and dimensions shall be in conformance with the "Texas Manual on Uniform Traffic Control Devices" (TMUTCD).
3. Additional supplemental pavement marking details may be found in the plans or specifications.
4. Pavement markings shall be installed in accordance with the TMUTCD and as shown on the plans.
5. When short term markings are required on the plans, short term markings shall conform with the TMUTCD, the plans and details as shown on the Standard Plan Sheet WZ(STPM).
6. When standard pavement markings are not in place and the roadway is opened to traffic, DO NOT PASS signs shall be erected to mark the beginning of the sections where passing is prohibited and PASS WITH CARE signs at the beginning of sections where passing is permitted.
7. All work zone pavement markings shall be installed in accordance with Item 662, "Work Zone Pavement Markings."

RAISED PAVEMENT MARKERS

1. Raised pavement markers are to be placed according to the patterns on BC(12).
2. All raised pavement markers used for work zone markings shall meet the requirements of Item 672, "RAISED PAVEMENT MARKERS" and Departmental Material Specification DMS-4200 or DMS-4300.

PREFABRICATED PAVEMENT MARKINGS

1. Removable prefabricated pavement markings shall meet the requirements of DMS-8241.
2. Non-removable prefabricated pavement markings (foil back) shall meet the requirements of DMS-8240.

MAINTAINING WORK ZONE PAVEMENT MARKINGS

1. The Contractor will be responsible for maintaining work zone pavement markings within the work limits.
2. Work zone pavement markings shall be inspected in accordance with the frequency and reporting requirements of work zone traffic control device inspections as required by Form 599.
3. The markings should provide a visible reference for a minimum distance of 300 feet during normal daylight hours and 160 feet when illuminated by automobile low-beam headlights at night, unless sight distance is restricted by roadway geometrics.
4. Markings failing to meet this criteria within the first 30 days after placement shall be replaced at the expense of the Contractor as per Specification Item 662.

REMOVAL OF PAVEMENT MARKINGS

1. Pavement markings that are no longer applicable, could create confusion or direct a motorist toward or into the closed portion of the roadway shall be removed or obliterated before the roadway is opened to traffic.
2. The above shall not apply to detours in place for less than three days, where flaggers and/or sufficient channelizing devices are used in lieu of markings to outline the detour route.
3. Pavement markings shall be removed to the fullest extent possible, so as not to leave a discernable marking. This shall be by any method approved by TxDOT Specification Item 677 for "Eliminating Existing Pavement Markings and Markers".
4. The removal of pavement markings may require resurfacing or seal coating portions of the roadway as described in Item 677.
5. Subject to the approval of the Engineer, any method that proves to be successful on a particular type pavement may be used.
6. Blast cleaning may be used but will not be required unless specifically shown in the plans.
7. Over-painting of the markings SHALL NOT BE permitted.
8. Removal of raised pavement markers shall be as directed by the Engineer.
9. Removal of existing pavement markings and markers will be paid for directly in accordance with Item 677, "ELIMINATING EXISTING PAVEMENT MARKINGS AND MARKERS," unless otherwise stated in the plans.
10. Black-out marking tape may be used to cover conflicting existing markings for periods less than two weeks when approved by the Engineer.

Temporary Flexible-Reflective Roadway Marker Tabs

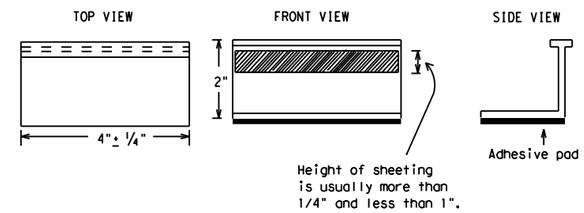

STAPLES OR NAILS SHALL NOT BE USED TO SECURE TEMPORARY FLEXIBLE-REFLECTIVE ROADWAY MARKER TABS TO THE PAVEMENT SURFACE

1. Temporary flexible-reflective roadway marker tabs used as guidemarks shall meet the requirements of DMS-8242.
2. Tabs detailed on this sheet are to be inspected and accepted by the Engineer or designated representative. Sampling and testing is not normally required, however at the option of the Engineer, either "A" or "B" below may be imposed to assure quality before placement on the roadway.
   A. Select five (5) or more tabs at random from each lot or shipment and submit to the Construction Division, Materials and Pavement Section to determine specification compliance.
   B. Select five (5) tabs and perform the following test. Affix five (5) tabs at 24 inch intervals on an asphaltic pavement in a straight line. Using a medium size passenger vehicle or pickup, run over the markers with the front and rear tires at a speed of 35 to 40 miles per hour, four (4) times in each direction. No more than one (1) out of the five (5) reflective surfaces shall be lost or displaced as a result of this test.
3. Small design variances may be noted between tab manufacturers.
4. See Standard Sheet WZ(STPM) for tab placement on new pavements. See Standard Sheet TCP(7-1) for tab placement on seal coat work.

RAISED PAVEMENT MARKERS USED AS GUIDEMARKS

1. Raised pavement markers used as guidemarks shall be from the approved product list, and meet the requirements of DMS-4200.
2. All temporary construction raised pavement markers provided on a project shall be of the same manufacturer.
3. Adhesive for guidemarks shall be bituminous material hot applied or butyl rubber pad for all surfaces, or thermoplastic for concrete surfaces.

Guidemarks shall be designated as:
YELLOW - (two amber reflective surfaces with yellow body).
WHITE - (one silver reflective surface with white body).

DEPARTMENTAL MATERIAL SPECIFICATIONS	
PAVEMENT MARKERS (REFLECTORIZED)	DMS-4200
TRAFFIC BUTTONS	DMS-4300
EPOXY AND ADHESIVES	DMS-6100
BITUMINOUS ADHESIVE FOR PAVEMENT MARKERS	DMS-6130
PERMANENT PREFABRICATED PAVEMENT MARKINGS	DMS-8240
TEMPORARY REMOVABLE, PREFABRICATED PAVEMENT MARKINGS	DMS-8241
TEMPORARY FLEXIBLE, REFLECTIVE ROADWAY MARKER TABS	DMS-8242

A list of prequalified reflective raised pavement markers, non-reflective traffic buttons, roadway marker tabs and other pavement markings can be found at the Material Producer List web address shown on BC(1).

Texas Department of Transportation — Traffic Safety Division Standard

BARRICADE AND CONSTRUCTION PAVEMENT MARKINGS

BC(11)-21

FILE: bc-21.dgn	DN: TxDOT	CK: TxDOT	DW: TxDOT	CK: TxDOT
© TxDOT February 1998	CONT	SECT	JOB	HIGHWAY
REVISIONS 2-98 9-07 5-21				VARIOUS
1-02 7-13	DIST	COUNTY		SHEET NO.
11-02 8-14		DENTON		21

105

PAVEMENT MARKING PATTERNS

REFLECTORIZED PAVEMENT MARKINGS - PATTERN A

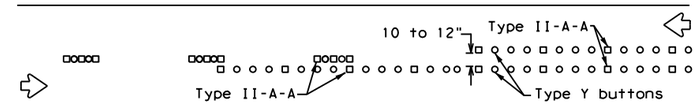

RAISED PAVEMENT MARKERS - PATTERN A

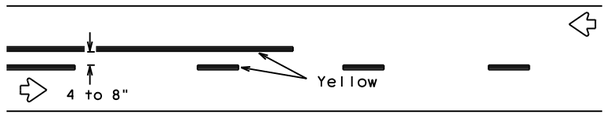

REFLECTORIZED PAVEMENT MARKINGS - PATTERN B

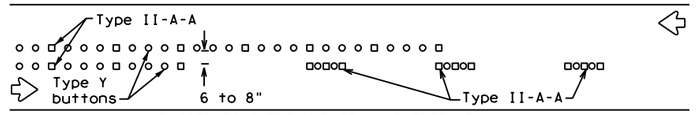

RAISED PAVEMENT MARKERS - PATTERN B

Pattern A is the TXDOT Standard, however Pattern B may be used if approved by the Engineer.
Prefabricated markings may be substituted for reflectorized pavement markings.

CENTER LINE & NO-PASSING ZONE BARRIER LINES FOR TWO-LANE, TWO-WAY HIGHWAYS

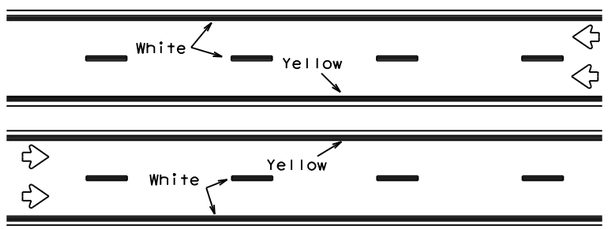

REFLECTORIZED PAVEMENT MARKINGS

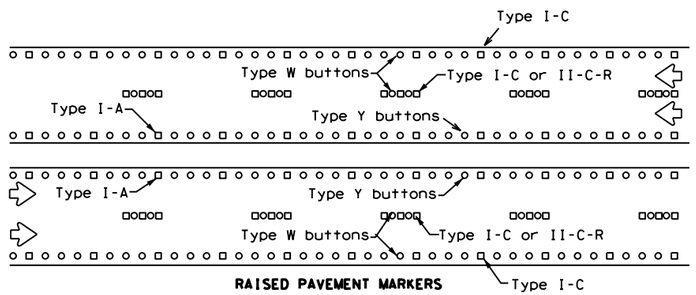

RAISED PAVEMENT MARKERS

Prefabricated markings may be substituted for reflectorized pavement markings.

EDGE & LANE LINES FOR DIVIDED HIGHWAY

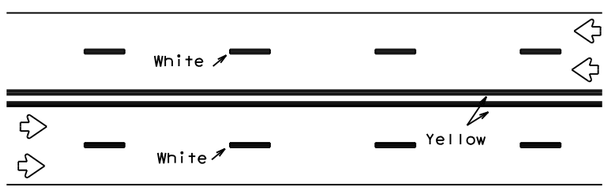

REFLECTORIZED PAVEMENT MARKINGS

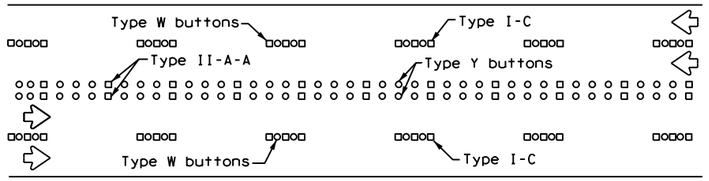

RAISED PAVEMENT MARKERS

Prefabricated markings may be substituted for reflectorized pavement markings.

LANE & CENTER LINES FOR MULTILANE UNDIVIDED HIGHWAYS

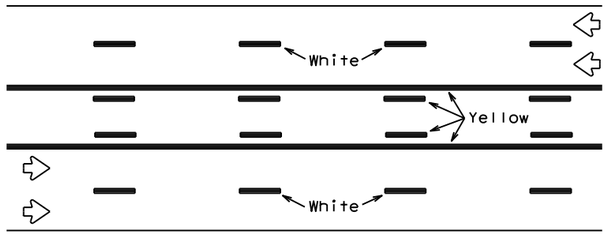

REFLECTORIZED PAVEMENT MARKINGS

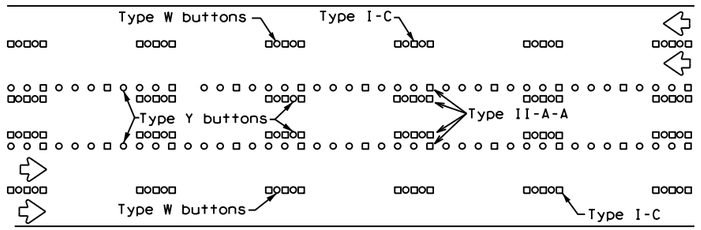

RAISED PAVEMENT MARKERS

Prefabricated markings may be substituted for reflectorized pavement markings.

TWO-WAY LEFT TURN LANE

STANDARD WORK ZONE PAVEMENT MARKINGS DETAILS

SOLID LINES

DOUBLE NO-PASSING LINE

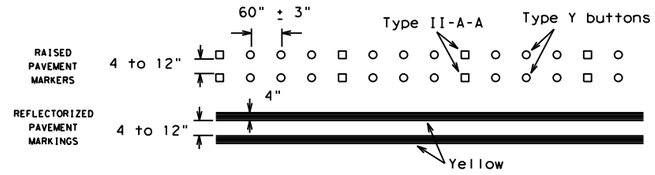

EDGE LINE OR SINGLE NO-PASSING LINE

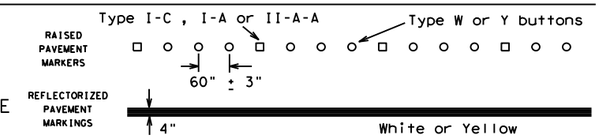

WIDE LINE

(FOR LEFT TURN CHANNELIZING LINE OR CHANNELIZING LINE USED TO DISCOURAGE LANE CHANGING.)

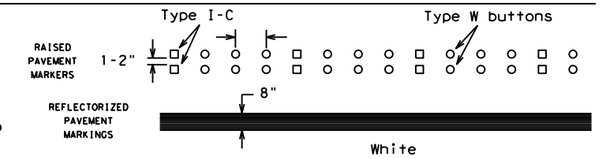

BROKEN LINES

CENTER LINE OR LANE LINE

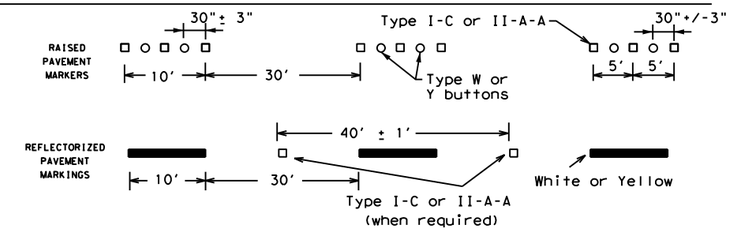

AUXILIARY OR LANEDROP LINE

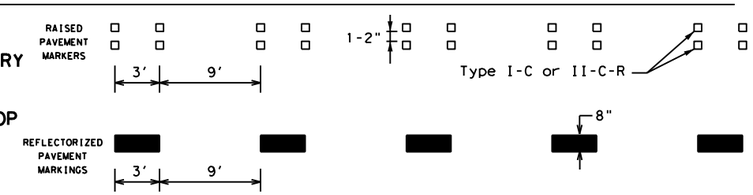

REMOVABLE MARKINGS WITH RAISED PAVEMENT MARKERS

If raised pavement markers are used to supplement REMOVABLE markings, the markers shall be applied to the top of the tape at the approximate mid length of tape used for broken lines or at 20 foot spacing for solid lines. This allows an easier removal of raised pavement markers and tape.

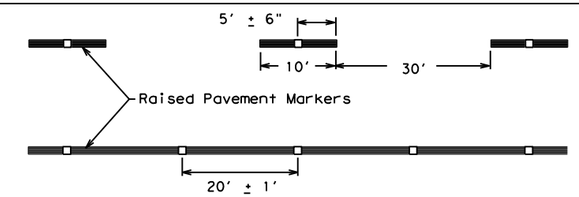

Centerline only - not to be used on edge lines

Raised pavement markers used as standard pavement markings shall be from the approved products list and meet the requirements of Item 672 "RAISED PAVEMENT MARKERS."

SHEET 12 OF 12

Texas Department of Transportation — Traffic Safety Division Standard

BARRICADE AND CONSTRUCTION PAVEMENT MARKING PATTERNS

BC(12)-21

FILE: bc-21.dgn	DN: TxDOT	CK: TxDOT	DW: TxDOT	CK: TxDOT
© TxDOT February 1998	CONT	SECT	JOB	HIGHWAY
REVISIONS 1-97 9-07 5-21 2-98 7-13 11-02 8-14				VARIOUS
	DIST	COUNTY		SHEET NO.
		DENTON		22

106

DISCLAIMER:
The use of this standard is governed by the "Texas Engineering Practice Act". No warranty of any kind is made by TxDOT for any purpose whatsoever. TxDOT assumes no responsibility for the conversion of this standard to other formats or for incorrect results or damages resulting from its use.

DATE: 10/16/2025 3:45:35 PM
FILE: S:\WHOU-Tran\5482\5482-2401\400 Production\4 - Design\Plan Set\2. TCP\Standards\TxDOT\bc-21.dgn

DISCLAIMER:
The use of this standard is governed by the "Texas Engineering Practice Act". No warranty of any kind is made by TxDOT for any purpose whatsoever. TxDOT assumes no responsibility for the conversion of this standard to other formats or for incorrect results or damages resulting from its use.

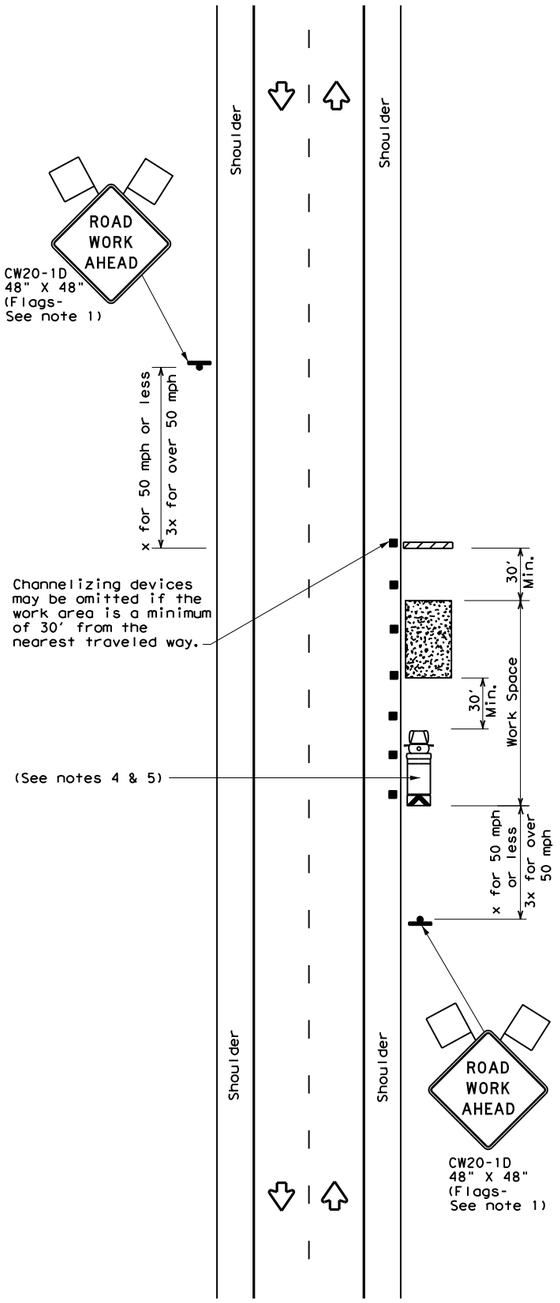

TCP (2-1a)

WORK SPACE NEAR SHOULDER

Conventional Roads

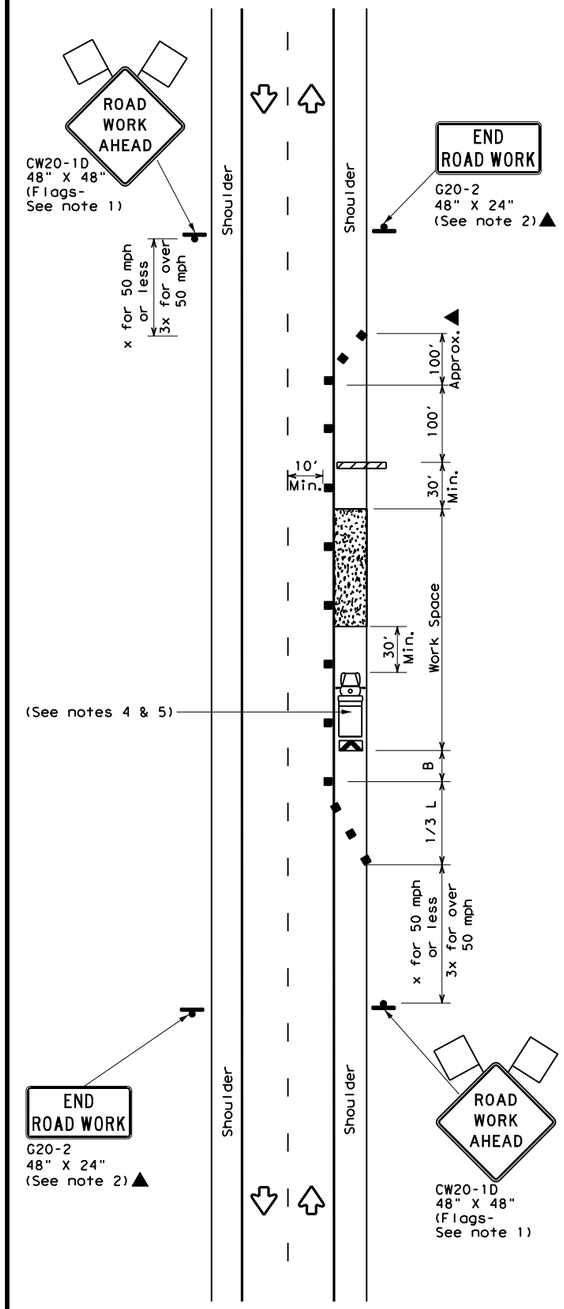

TCP (2-1b)

WORK SPACE ON SHOULDER

Conventional Roads

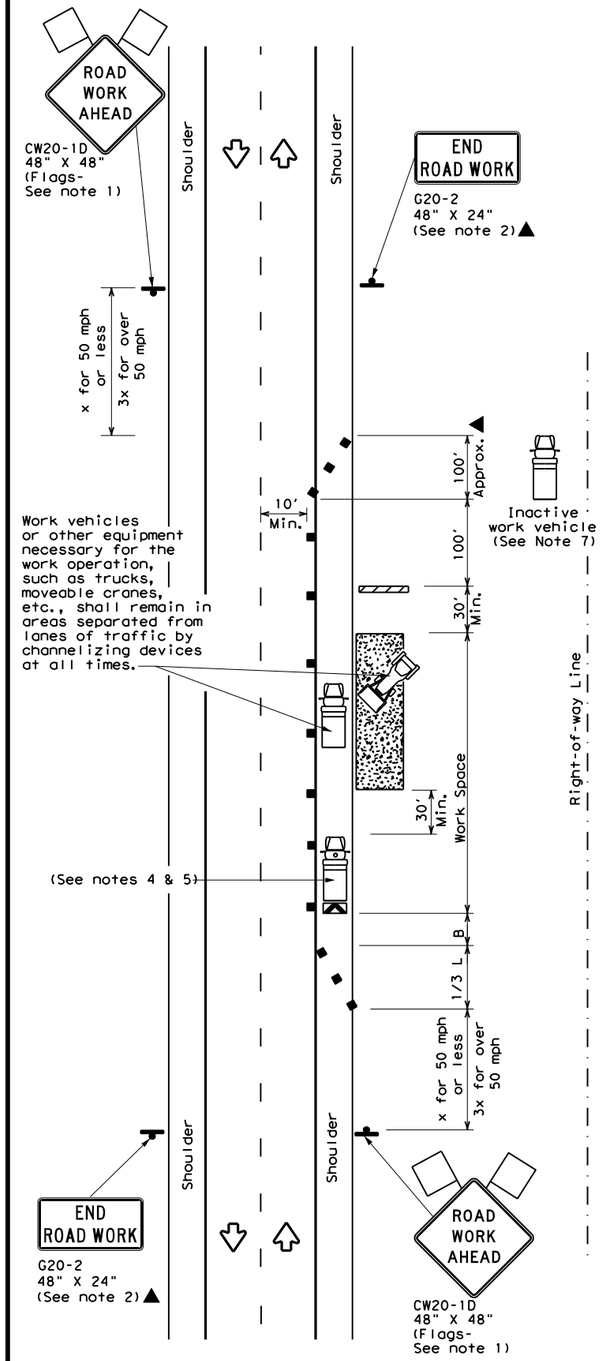

TCP (2-1c)

WORK VEHICLES ON SHOULDER

Conventional Roads

LEGEND

	Type 3 Barricade		Channelizing Devices
	Heavy Work Vehicle		Truck Mounted Attenuator (TMA)
	Trailer Mounted Flashing Arrow Board		Portable Changeable Message Sign (PCMS)
	Sign		Traffic Flow
	Flag		Flagger

Posted Speed *	Formula	Minimum Desirable Taper Lengths **			Suggested Maximum Spacing of Channelizing Devices		Minimum Sign Spacing "X" Distance	Suggested Longitudinal Buffer Space "B"
		10' Offset	11' Offset	12' Offset	On a Taper	On a Tangent		
30	$L = \frac{WS^2}{60}$	150'	165'	180'	30'	60'	120'	90'
35		205'	225'	245'	35'	70'	160'	120'
40		265'	295'	320'	40'	80'	240'	155'
45	L = WS	450'	495'	540'	45'	90'	320'	195'
50		500'	550'	600'	50'	100'	400'	240'
55		550'	605'	660'	55'	110'	500'	295'
60		600'	660'	720'	60'	120'	600'	350'
65		650'	715'	780'	65'	130'	700'	410'
70		700'	770'	840'	70'	140'	800'	475'
75		750'	825'	900'	75'	150'	900'	540'

* Conventional Roads Only

** Taper lengths have been rounded off.
L=Length of Taper(FT) W=Width of Offset(FT) S=Posted Speed(MPH)

TYPICAL USAGE

MOBILE	SHORT DURATION	SHORT TERM STATIONARY	INTERMEDIATE TERM STATIONARY	LONG TERM STATIONARY
	✓	✓	✓	✓

GENERAL NOTES

1. Flags attached to signs where shown, are REQUIRED.
2. All traffic control devices illustrated are REQUIRED, except those denoted with the triangle symbol may be omitted when stated in the plans, or for routine maintenance work, when approved by the Engineer.
3. Stockpiled material should be placed a minimum of 30 feet from nearest traveled way.
4. Shadow Vehicle with TMA and high intensity rotating, flashing, oscillating or strobe lights. A Shadow Vehicle with a TMA should be used anytime it can be positioned 30 to 100 feet in advance of the area of crew exposure without adversely affecting the performance or quality of the work. If workers are no longer present but road or work conditions require the traffic control to remain in place, Type 3 Barricades or other channelizing devices may be substituted for the Shadow Vehicle and TMA.
5. Additional Shadow Vehicles with TMAs may be positioned off the paved surface, next to those shown in order to protect a wider work space.
6. See TCP(5-1) for shoulder work on divided highways, expressways and freeways.
7. Inactive work vehicles or other equipment should be parked near the right-of-way line and not parked on the paved shoulder.
8. CW21-5 "SHOULDER WORK" signs may be used in place of CW20-1D "ROAD WORK AHEAD" signs for shoulder work on conventional roadways.

Texas Department of Transportation

Traffic Operations Division Standard

TRAFFIC CONTROL PLAN CONVENTIONAL ROAD SHOULDER WORK

TCP(2-1)-18

FILE: tcp2-1-18.dgn	DN:	CK:	DW:	CK:
©TxDOT December 1985	CONT	SECT	JOB	HIGHWAY
REVISIONS				VARIOUS
2-94 4-98	DIST		COUNTY	SHEET NO.
8-95 2-12			DENTON	23
1-97 2-18				

DATE: 10/16/2025 3:45:39 PM
FILE: S:\WHOU-Tran\5482\5482-2401\400 Production\4 - Design\Plan Set\2. TCP\5f0ffc0f-0ca9-4b8f-a9ce-1fa9ec4b0fb7.dgn

DISCLAIMER:
The use of this standard is governed by the "Texas Engineering Practice Act". No warranty of any kind is made by TxDOT for any purpose whatsoever. TxDOT assumes no responsibility for the conversion of this standard to other formats or for incorrect results or damages resulting from its use.

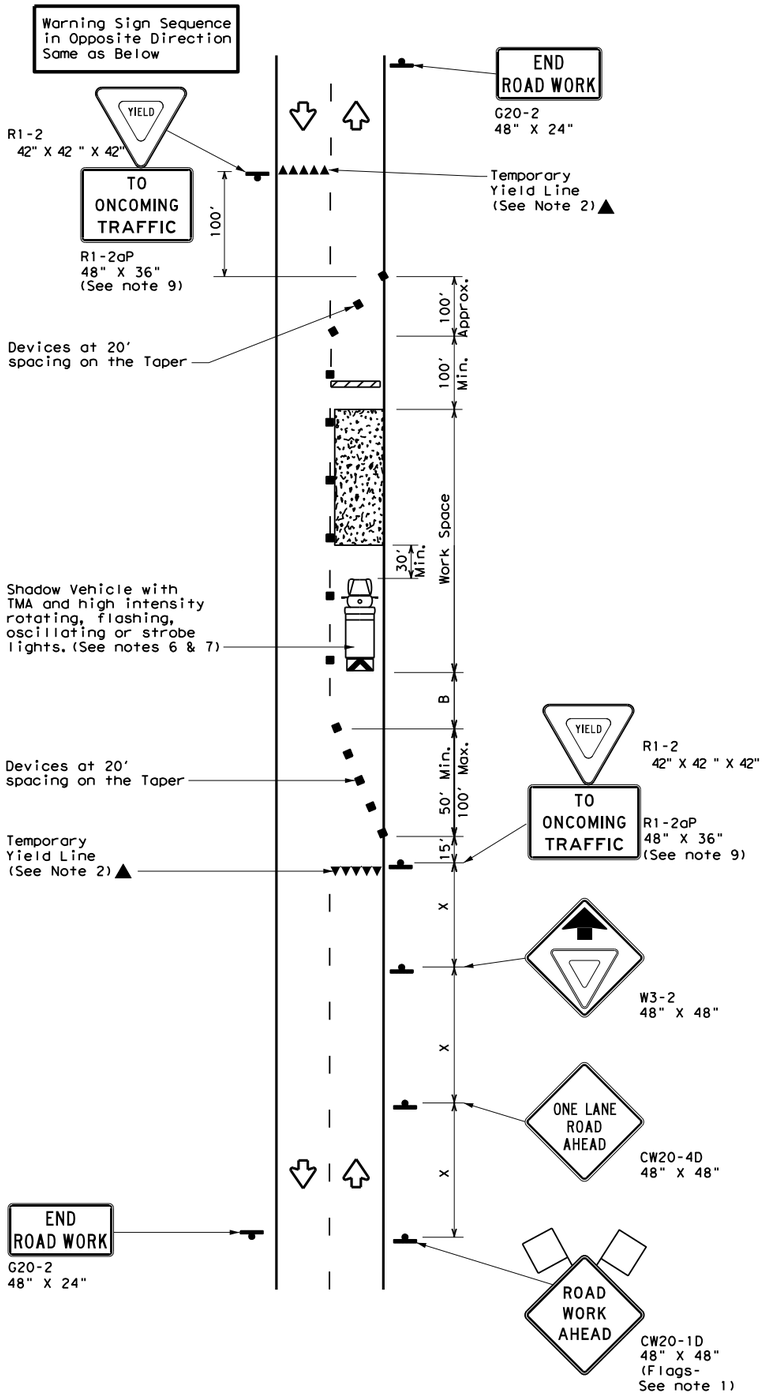

TCP (2-2a)

2-LANE ROADWAY WITHOUT PAVED SHOULDERS

ONE LANE TWO-WAY

CONTROL WITH YIELD SIGNS

(Less than 2000 ADT - See Note 9)

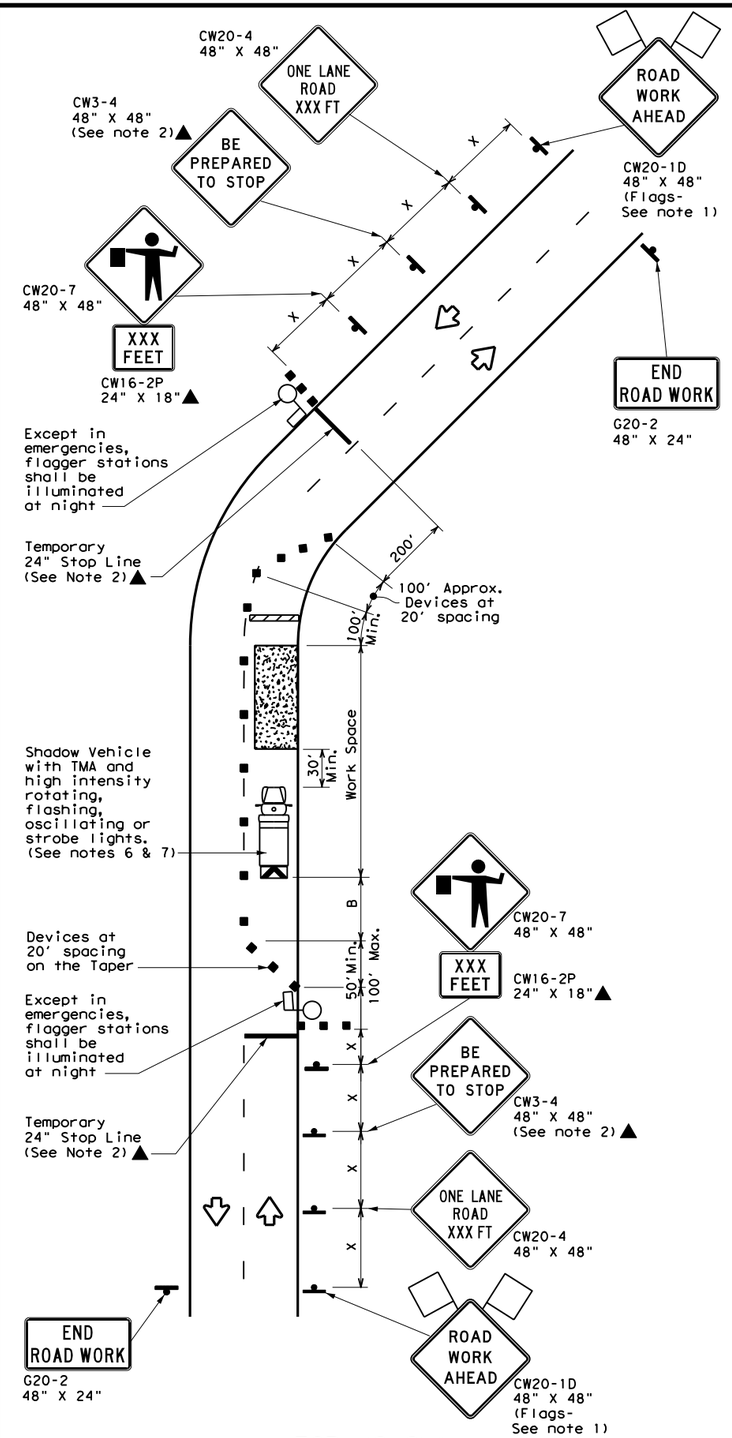

TCP (2-2b)

2-LANE ROADWAY WITHOUT PAVED SHOULDERS

ONE LANE TWO-WAY

CONTROL WITH FLAGGERS

LEGEND

	Type 3 Barricade		Channelizing Devices
	Heavy Work Vehicle		Truck Mounted Attenuator (TMA)
	Trailer Mounted Flashing Arrow Board	M	Portable Changeable Message Sign (PCMS)
	Sign		Traffic Flow
	Flag		Flagger

Posted Speed *	Formula	Minimum Desirable Taper Lengths **			Suggested Maximum Spacing of Channelizing Devices		Minimum Sign Spacing "X" Distance	Suggested Longitudinal Buffer Space "B"	Stopping Sight Distance
		10' Offset	11' Offset	12' Offset	On a Taper	On a Tangent			
30	$L = \frac{WS^2}{60}$	150'	165'	180'	30'	60'	120'	90'	200'
35		205'	225'	245'	35'	70'	160'	120'	250'
40		265'	295'	320'	40'	80'	240'	155'	305'
45	L = WS	450'	495'	540'	45'	90'	320'	195'	360'
50		500'	550'	600'	50'	100'	400'	240'	425'
55		550'	605'	660'	55'	110'	500'	295'	495'
60		600'	660'	720'	60'	120'	600'	350'	570'
65		650'	715'	780'	65'	130'	700'	410'	645'
70		700'	770'	840'	70'	140'	800'	475'	730'
75		750'	825'	900'	75'	150'	900'	540'	820'

* Conventional Roads Only

** Taper lengths have been rounded off.

L=Length of Taper(FT) W=Width of Offset(FT) S=Posted Speed(MPH)

TYPICAL USAGE

MOBILE	SHORT DURATION	SHORT TERM STATIONARY	INTERMEDIATE TERM STATIONARY	LONG TERM STATIONARY
	✓	✓	✓	

GENERAL NOTES

1. Flags attached to signs where shown, are REQUIRED.
2. All traffic control devices illustrated are REQUIRED, except those denoted with the triangle symbol may be omitted when stated elsewhere in the plans, or for routine maintenance work, when approved by the Engineer.
3. The CW3-4 "BE PREPARED TO STOP" sign may be installed after the CW20-4 "ONE LANE ROAD XXX FT" sign, but proper sign spacing shall be maintained.
4. Flaggers should use two-way radios or other methods of communication to control traffic.
5. Length of work space should be based on the ability of flaggers to communicate.
6. A Shadow Vehicle with a TMA should be used anytime it can be positioned 30 to 100 feet in advance of the area of crew exposure without adversely affecting the performance or quality of the work. If workers are no longer present but road or work conditions require the traffic control to remain in place, Type 3 Barricades or other channelizing devices may be substituted for the Shadow Vehicle and TMA.
7. Additional Shadow Vehicles with TMAs may be positioned off the paved surface, next to those shown in order to protect a wider work space.

TCP (2-2a)

8. The R1-2 "YIELD" sign traffic control may be used on projects with approaches that have adequate sight distance. For projects in urban areas, work space should be no longer than one half city block. In rural areas, roadways with less than 2000 ADT, work space should be no longer than 400 feet.
9. The R1-2aP "YIELD TO ONCOMING TRAFFIC" sign shall be placed on a support at a 7 foot minimum mounting height.

TCP (2-2b)

10. Channelizing devices on the center line may be omitted when a pilot car is leading traffic and approved by the Engineer.
11. If the work space is located near a horizontal or vertical curve, the buffer distances should be increased in order to maintain stopping sight distance to the flagger and a queue of stopped vehicles. (See table above).
12. Flaggers should use 24" STOP/SLOW paddles to control traffic. Flags should be limited to emergency situtations.

Texas Department of Transportation

Traffic Operations Division Standard

TRAFFIC CONTROL PLAN ONE-LANE TWO-WAY TRAFFIC CONTROL

TCP(2-2)-18

FILE: tcp2-2-18.dgn	DN:	CK:	DW:	CK:
©TxDOT December 1985	CONT	SECT	JOB	HIGHWAY
REVISIONS 8-95 3-03 1-97 2-12 4-98 2-18				VARIOUS
	DIST	COUNTY		SHEET NO.
		DENTON		24

DATE: 10/16/2025 3:45:42 PM
FILE: S:\WHOU-Tran\5482\5482-2401\400 Production\4 - Design\Plan Set\2. TCP\Standard\tcp2-2-18.dgn

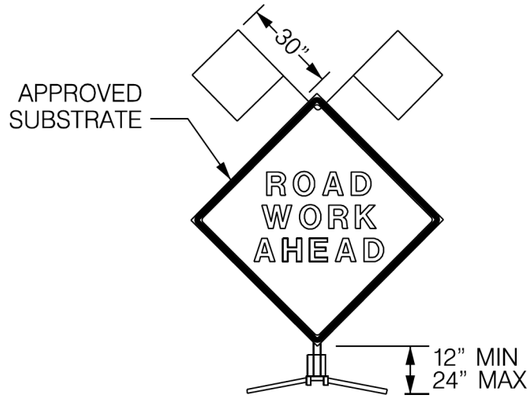

FLAGS AS REQUIRED BY ENGINEER OR AS SHOWN ON PLANS

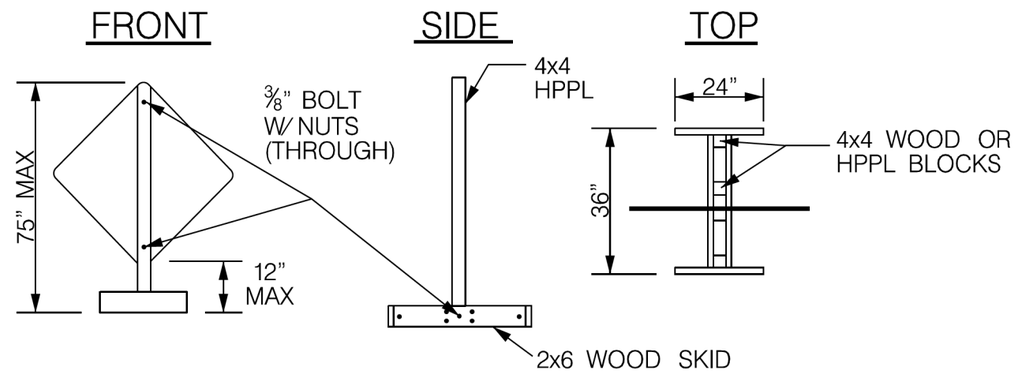

UPRIGHT TO BE MADE OF HOLLOW PROFILE PLASTIC LUMBER (HPPL) DO NOT USE WOOD OR METAL.

SIGN SUPPORTS

CW21–9

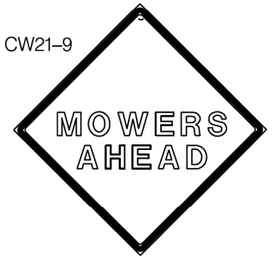

48" x 48"

#CW21–SPECIAL

48" x 48"

CW20–18

48" x 48"

CW20–1D

48" x 48"

SIGNS MUST BE IN ACCORDANCE WITH CWZTCD FOR STREETS AND HIGHWAYS.

ROLL UP SIGNS THAT CONFORM TO CWZTCD ARE ALLOWED

NOTES

1. SEE TxDOT COMPLIANT WORK ZONE TRAFFIC CONTROL DEVICE (CWZTCD) LIST FOR APPROVED SUBSTRATE FOR EACH TYPE OF SIGN SUPPORT.

2. USE SCREWS OR NUTS AND BOLTS TO ATTACH SIGNS TO WOODEN BOARDS. DO NOT USE NAILS. ATTACH SIGN SUBSTRATES TO OTHER MATERIALS USING TxDOT OR MANUFACTURERS RECOMMENDATIONS.

NOTE:
DETAIL SUBJECT TO CHANGE PER DIRECTION OF CITY OF LEWISVILLE ENGINEERING DIVISION.

DISCLAIMER:
The use of this standard is governed by the "Texas Engineering Practice Act." No warranty of any kind is made by the City of Lewisville or TxDOT for any purpose whatsoever. The City and TxDOT do not assume responsibility for the conversion of this standard to other formats or for incorrect results or damages resulting from its use.

LEWISVILLE
Deep Roots. Broad Wings. Bright Future.

Standard Details

Roadside Traffic Control Signs and Supports

Revisions:

No.	Description	Date

Engineering Department

Office No. 972–219–3490

www.cityoflewisville.com

Revised Date: 07–24–25

Sheet: 25

3:45:48 PM 10/16/2025
S:\WMOU-Fran\5482\5482-240\400 Production\4 - Design\Plan Set\2. TCP\Standards\City\5482-TCP.dgn

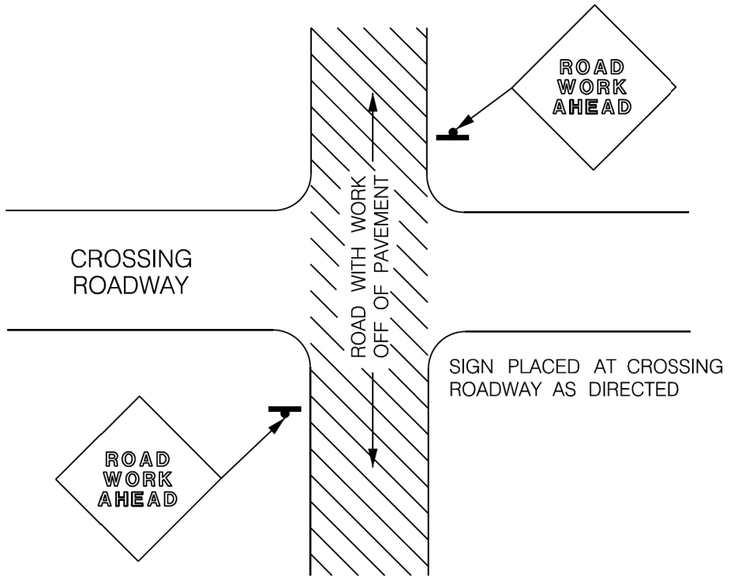

TYPICAL LOCATION OF SIGNS AT ROADWAY CROSSING

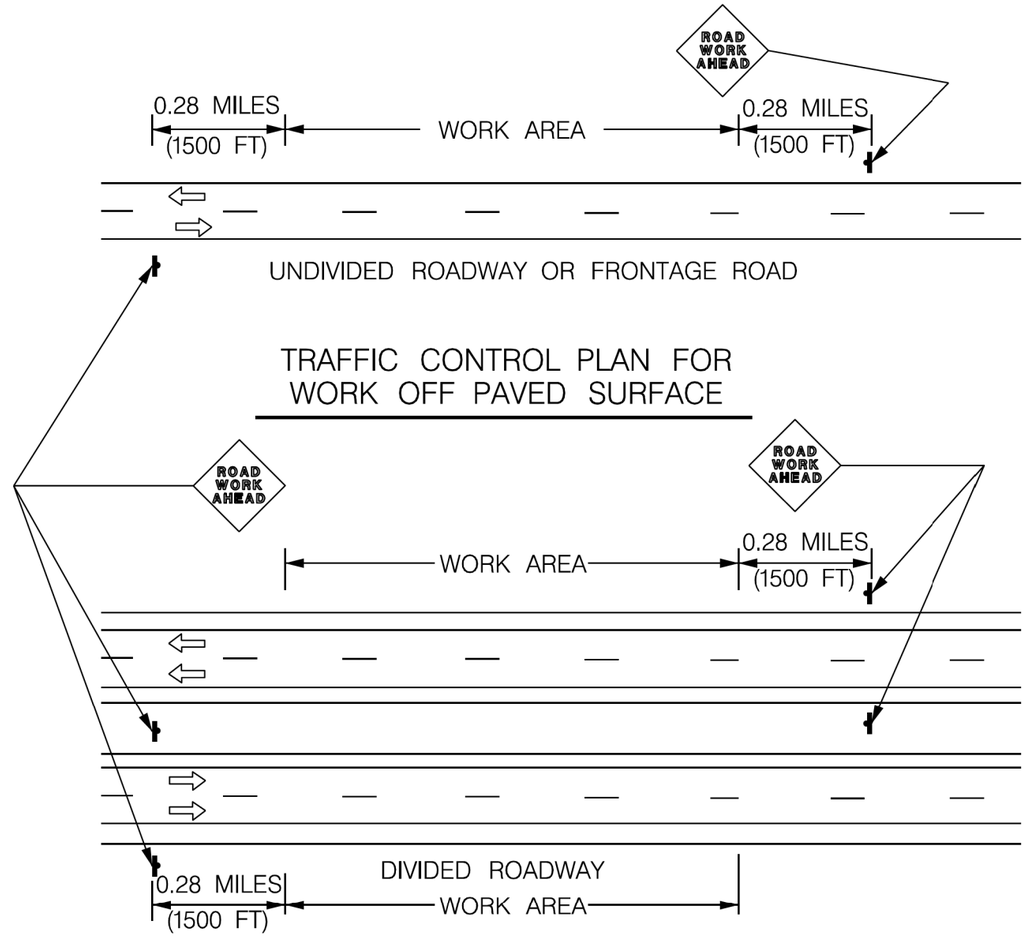

TRAFFIC CONTROL PLAN FOR WORK OFF PAVED SURFACE

NOTES

1. WORK AREA IS A MAXIMUM OF 2.0 MILES UNLESS OTHERWISE DIRECTED.
2. SIGNS MAY REMAIN IN PLACE ONLY DURING DAYLIGHT HOURS.
3. PLACE SIGNS 6– TO 12–FEET OFF PAVED SURFACE UNLESS OTHERWISE DIRECTED.
4. "ROAD WORK AHEAD" SIGNS ARE EXPAMPLES, USE ONE OF THE FOUR TYPE SIGNS AS DIRECTED
5. SIGNS IN THE MEDIAN ARE REQURED WHEN WORK OCCURS IN THE MEDIAN

DISCLAIMER:
The use of this standard is governed by the "Texas Engineering Practice Act." No warranty of any kind is made by the City of Lewisville or TxDOT for any purpose whatsoever. The City and TxDOT do not assume responsibility for the conversion of this standard to other formats or for incorrect results or damages resulting from its use.

LEWISVILLE
Deep Roots. Broad Wings. Bright Future.

Standard Details

Roadside Traffic Control Sign Location and Plan

Revisions:

No.	Description	Date

Engineering Department

Office No. 972–219–3490

www.cityoflewisville.com

Revised Date: 07–24–25

Sheet: 26

3:45:51 PM 10/16/2025
S:\Whou-Trans\5482\5482-2401\400 Production\4 - Design\Plan Set\2. TCP\Standards\City\5482-TCP.dgn

GENERAL NOTES FOR WORK ZONE SIGNS

1. Contractor to install and maintain signs in a straight and plumb condition or as directed by Inspector.
2. Paint wooden sign posts white.
3. Do not use barricades as sign supports.
4. Do not use nails to attach signs to any support.
5. Install all signs in accordance with plans or as directed by Inspector. Use signs to regulate, warn, and guide traveling public safely through the work zone.
6. The Contractor may furnish either the sign design shown in plans or the "Standard Highway Designs for Texas" SHSD. The Inspector may require the Contractor to furnish other work zone signs that are shown in the TMUTCD but have been omitted from the plans.
7. Any variation in plans must be documented by written agreement between the Engineer and the Contractor's Responsible Person. All changes must be documented in writing before implementation.
8. Additional signs requested by Inspector are not subsidiary.
9. The Contractor will furnish sign supports listed in the "Compliant Work Zone Traffic Control Device List (CWZTCD).
10. The contractor will install the sign support in accordance wtih the manufacturer's recommendations.
11. If there is a question regarding the installation procedures, the Contractor will supply the Engineer and Inspector a copy of the manufacturer's recommendations so the Engineer and Inspector can verify correct procedures are followed.
12. The Contractor is responsible for sign installation and replacing damaged or cracked substrates or damaged or marred reflective sheeting as directed by the Inspector.
13. Identification marking may only be shown on the back of sign substrate.
14. The maximum height of lettering and company logos for identification may only be one inch.
15. The Contractor must also replace any damaged posts. Do not use spliced wood posts.

DURATION OF WORK (AS DEFINED BY TMUTCD, PART VI)

1. The contractor is responsible for ensuring that the sign support and substrate meet crashworthiness.
2. For mowing operation, all signs and supports are short–term duration for daytime work.
3. The Contractor will furnish the sign sizes shown on sheet 5.13 as directed by the Engineer.

SIGN SUBSTRATES

1. The Contractor is responsible for ensuring that the sign substrate is allowed for the type of support being used. The CWZTCD lists each substrate to use for different types and models of sign supports.
2. "Mesh" type materials are NOT approved sign substrate.
3. All wooden individual sign panels fabricated from 2 or more pieces must have one or more plywood cleat, ½" thick by 6" wide, fastened to the back of the sign and extending fully across the sign.
4. Attach the cleat to the back of the sign using wood screws that do not penetrate the face of the sign panels.
5. Place the screws on both sides of the splice and space them at 6" centers.
6. The Engineer or Inspector may approve other methods of splicing sign faces.

DISCLAIMER:
The use of this standard is governed by the "Texas Engineering Practice Act." No warranty of any kind is made by the City of Lewisville or TxDOT for any purpose whatsoever. The City and TxDOT do not assume responsibility for the conversion of this standard to other formats or for incorrect results or damages resulting from its use.

LEWISVILLE
Deep Roots. Broad Wings. Bright Future.

Standard Details

Roadside Traffic Control Plan Notes (1 of 2)

Revisions:

No.	Description	Date

Engineering Department

Office No. 972–219–3490

www.cityoflewisville.com

Revised Date: 07–24–25

Sheet: 27

3:45:53 PM 10/16/2025
S:\Mobility Trans\5482\5482-240\100 Production\4 - Design\Plan Set\2. TCP\Standards\City\5482-TCP.dgn

REFLECTIVE SHEETING

1. Reflectorized signs to be constructed of sheeting that meets the color and retro–reflectivity requirements of DMS–8300 or DMS–8310.
2. Use white sheeting meeting DMS–8300 requirements Type C (High Specific Intensity) for signs with white background and channelizing devices.
3. Use orange sheeting meeting DMS–8300 requirements Type E (Fluorescent Prismatic) for signs with orange background.

SIGN LETTERS

1. All sign letters and numbers must be clear and open rounded type upper case alphabet letters as approved by the Federal Highway Administration (FHWA) and as published in the 'Standard Highway Sign Design for Texas' manual.
2. Signs, letters, and numbers must be of first class workmanship in accordance with TxDOT Standards and Specifications.

REMOVING OR COVERING

1. Remove or completely cover signs when not moving.
2. Do not use duct tape or other adhesive material to affix a sign face.
3. Remove signs and supports at the end of the day.

SIGN SUPPORT WEIGHTS

1. Where sign supports require the use of weights to keep from turning over, it is recommended that sandbags with dry cohesionless sand be used.
2. Tie the sandbags shut to keep the sand from spilling and to maintain a constant weight.
3. Rock, concrete, iron, steel, or other solid objects are not permitted to use as sign support weights.
4. Sandbags should weigh a minimum of 35 pounds and a maximum of 50 pounds.
5. Sandbags should be made of a durable material that tears upon vehicular impact.
6. Do not use rubber (such as tire inner tubes) for sandbags.
7. Do not use rubber ballasts (such as those used with cones or edgeline channelizers) for sign supports.
8. Only place sandbags along or over the base supports of the traffic control device and do not suspend them above ground level or hang them with rope, wire, chains or other fasteners.
9. Place sandbags along the length of the skids to weigh down the sign supports.
10. Do not place sandbags under the skid or use them to level sign supports placed on slopes.

CONTRACTOR REQUIREMENTS FOR MAINTAINING PERMANENT SIGNS WITHIN PROJECT LIMITS

1. Any sign, sign support, or traffic control device that is struck or damaged by the Contractor or their construction equipment must be replaced or repaired as soon as possible by the Contractor at the Contractor's expense.

DISCLAIMER:
The use of this standard is governed by the "Texas Engineering Practice Act." No warranty of any kind is made by the City of Lewisville or TxDOT for any purpose whatsoever. The City and TxDOT do not assume responsibility for the conversion of this standard to other formats or for incorrect results or damages resulting from its use.

LEWISVILLE
Deep Roots. Broad Wings. Bright Future.

Standard Details

Roadside Traffic Control Plan Notes (2 of 2)

Revisions:

No.	Description	Date

Engineering Department

Office No. 972–219–3490

www.cityoflewisville.com

Revised Date: 07–24–25

Sheet: 28

3:45:56 PM 10/16/2025
S:\MOD-Tran\5482\5482-2401\400 Production\4 - Design\Plan Set\2. TCP\Standards\City\5482-TCP.dgn

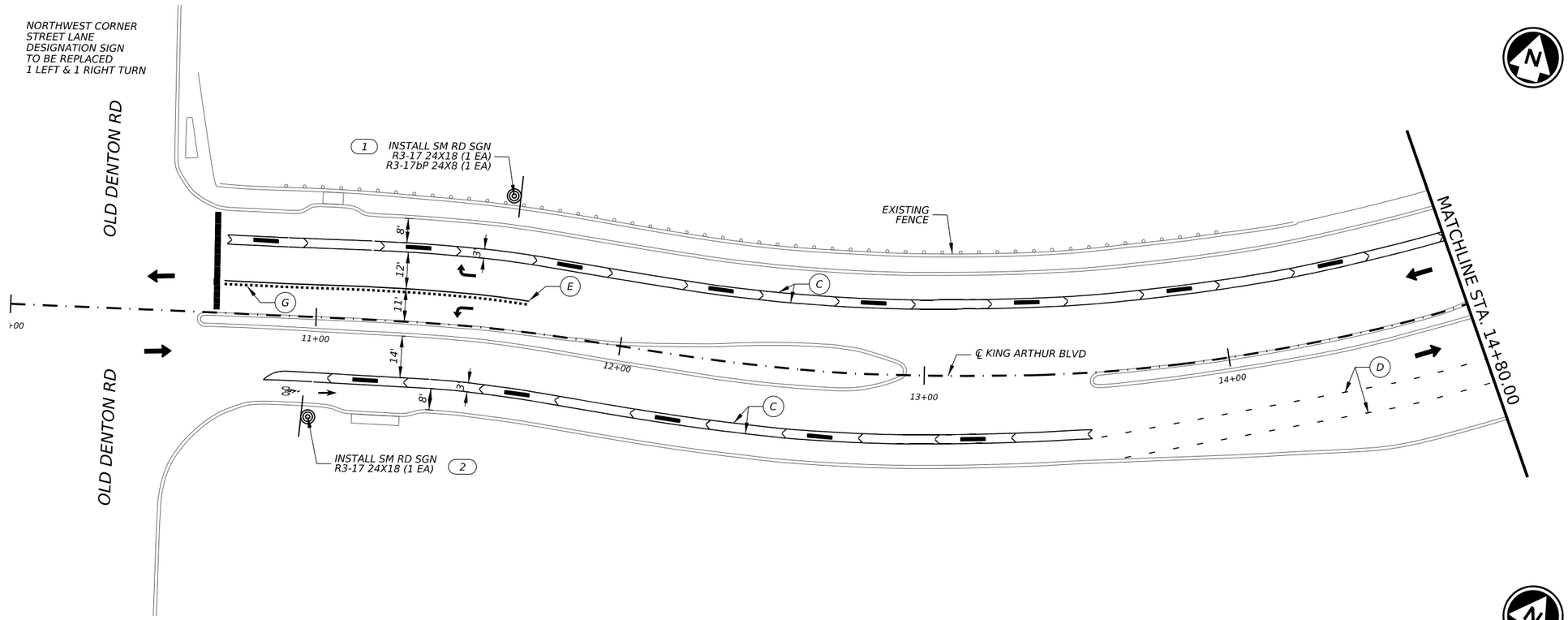

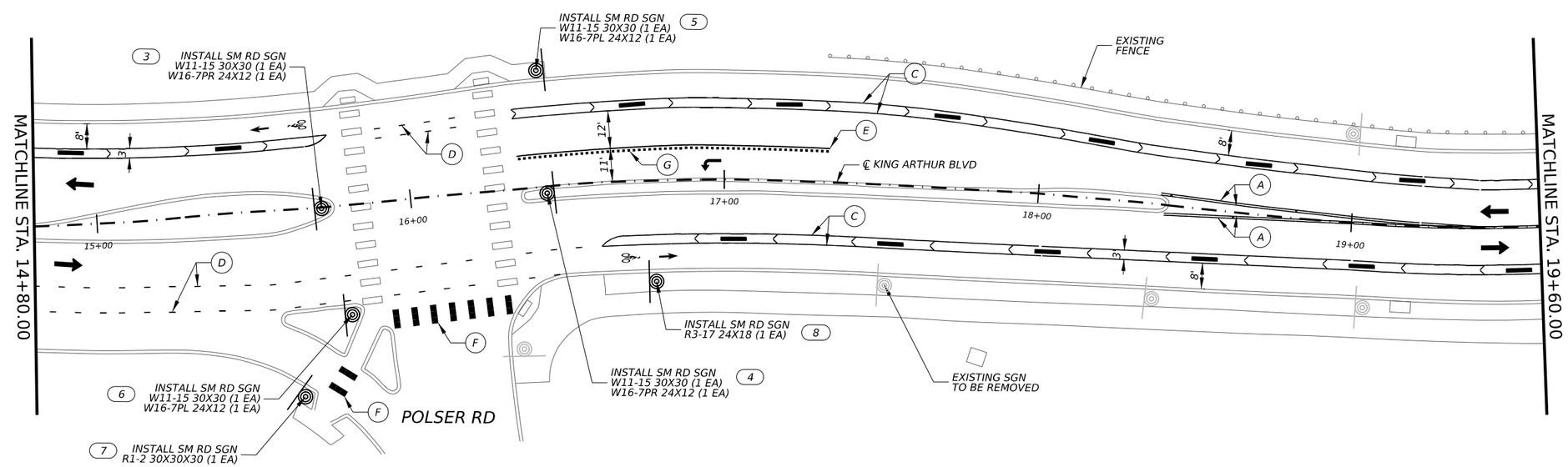

LEGEND

- TRAFFIC FLOW ARROWS
- CONC REMOVAL
- PROPOSED CONC SIDEWALK
- PROPOSED CONC PAVERS
- DETECTABLE WARNING
- BIKE LANE BARRIERS
- SIGN NUMBER
- (A) REFL PAV MRK TY I (Y)4"(SLD)(100MIL) WITH TYP II-A-A SPACED O.C. @ 40'
- (B) REFL PAV MRK TY I (Y)4"(DOT)(100MIL)
- (C) REFL PAV MRK TY I (W)4"(SLD)(100MIL)
- (D) REFL PAV MRK TY I (W)4"(DOT)(100MIL)
- (E) REFL PAV MRK TY I (W)8"(SLD)(100MIL)
- (F) REFL PAV MRK TY I (W)24"(SLD)(100MIL)
- (G) REFL PAV MRKR TY II-C-C @ 20" C.C.
- REFL PAV MRK TY I (W)(ARROW)(100MIL)
- R RAMP (CROSS SLOPE NOT TO EXCEED 2%; LONGITUDINAL NOT TO EXCEED 8.3%)
- L LANDING (SHALL NOT EXCEED 2% SLOPE IN ANY DIRECTION)
- EXISTING SIGN
- PROPOSED SIGN

NOTES

1. DIMENSIONS ARE MEASURED FROM FACE OF CURB UNLESS OTHERWISE SHOWN.
2. EXISTING FEATURES ARE SHOWN SCREENED BACK.
3. PROPOSED REFUGE MEDIANS ARE TO BE 1' FROM FACE OF CURB UNLESS OTHERWISE SHOWN.
4. PROPOSED CONTINENTAL CROSSWALKS TO BE 6' IN WIDTH UNLESS OTHERWISE SHOWN.

0 40 80
SCALE IN FEET

STATE OF TEXAS
S. P. BOOTH
94903
LICENSED
PROFESSIONAL ENGINEER

S. P. Booth 10/16/2025

LJA Engineering, Inc.
FRN - F-1386

LEWISVILLE
Deep Roots. Broad Wings. Bright Future.

CITY OF LEWISVILLE

KING ARTHUR BLVD
TRAFFIC CALMING
BEGIN PROJECT TO STA 19+60

SHEET 1 OF 8

CONT	SECT	JOB	HIGHWAY
			VARIOUS
DIST	COUNTY		SHEET NO.
	DENTON		29

3:46:14 PM 10/16/2025
S:\MPO\Fran\5482\5482-240\400 Production\4 - Design\Plan Set\3. Rodney\5482PLN01.dgn

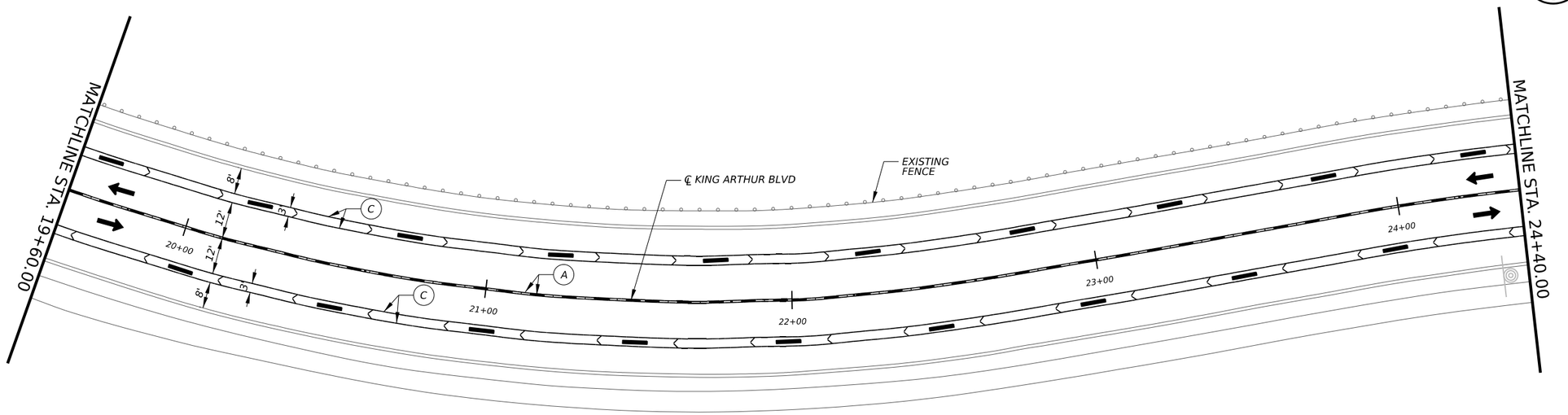

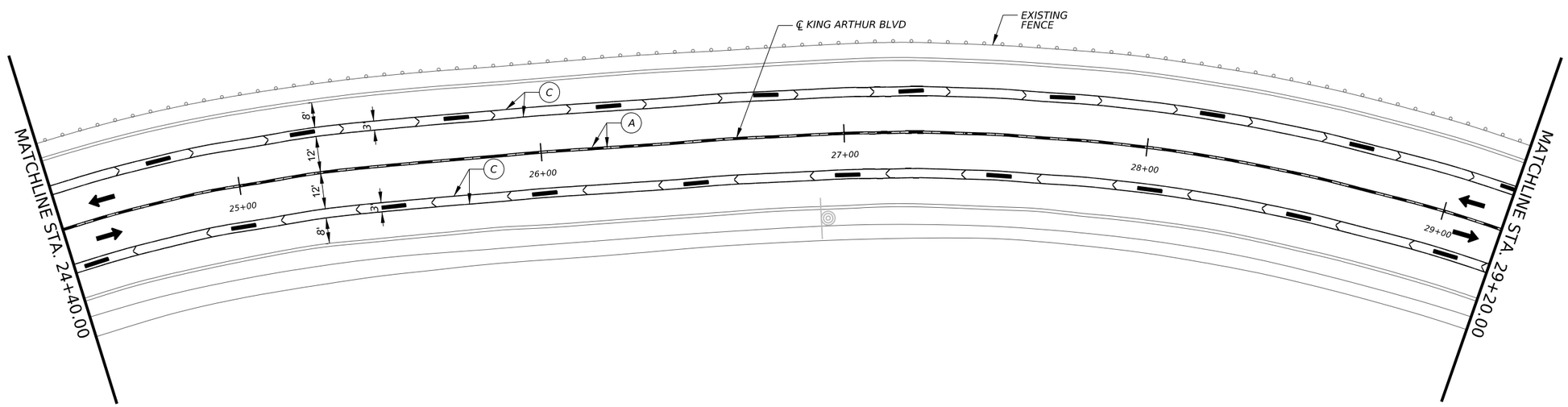

LEGEND

- TRAFFIC FLOW ARROWS
- CONC REMOVAL
- PROPOSED CONC SIDEWALK
- PROPOSED CONC PAVERS
- DETECTABLE WARNING
- BIKE LANE BARRIERS
- SIGN NUMBER
- (A) REFL PAV MRK TY I (Y)4"(SLD)(100MIL) WITH TYP II-A-A SPACED O.C. @ 40'
- (B) REFL PAV MRK TY I (Y)4"(DOT)(100MIL)
- (C) REFL PAV MRK TY I (W)4"(SLD)(100MIL)
- (D) REFL PAV MRK TY I (W)4"(DOT)(100MIL)
- (E) REFL PAV MRK TY I (W)8"(SLD)(100MIL)
- (F) REFL PAV MRK TY I (W)24"(SLD)(100MIL)
- (G) REFL PAV MRKR TY II-C-C @ 20" C.C.
- REFL PAV MRK TY I (W)(ARROW)(100MIL)
- R RAMP (CROSS SLOPE NOT TO EXCEED 2%; LONGITUDINAL NOT TO EXCEED 8.3%)
- L LANDING (SHALL NOT EXCEED 2% SLOPE IN ANY DIRECTION)
- EXISTING SIGN
- PROPOSED SIGN

NOTES

1. DIMENSIONS ARE MEASURED FROM FACE OF CURB UNLESS OTHERWISE SHOWN.
2. EXISTING FEATURES ARE SHOWN SCREENED BACK.
3. PROPOSED REFUGE MEDIANS ARE TO BE 1' FROM FACE OF CURB UNLESS OTHERWISE SHOWN.
4. PROPOSED CONTINENTAL CROSSWALKS TO BE 6' IN WIDTH UNLESS OTHERWISE SHOWN.

0 40 80
SCALE IN FEET

STATE OF TEXAS
S. P. BOOTH
94903
LICENSED
PROFESSIONAL ENGINEER

10/16/2025

LJA Engineering, Inc.
FRN - F-1386

LEWISVILLE
Deep Roots. Broad Wings. Bright Future.

CITY OF LEWISVILLE

KING ARTHUR BLVD
TRAFFIC CALMING
STA 19+60 TO STA 29+20

SHEET 2 OF 8

CONT	SECT	JOB	HIGHWAY
			VARIOUS
DIST	COUNTY		SHEET NO.
	DENTON		30

3:46:21 PM 10/16/2025
S:\MMOU-Fran\5482\5482-240\400 Production\4 - Design\Plan Set\3. Rodney\5482PLN02.dgn

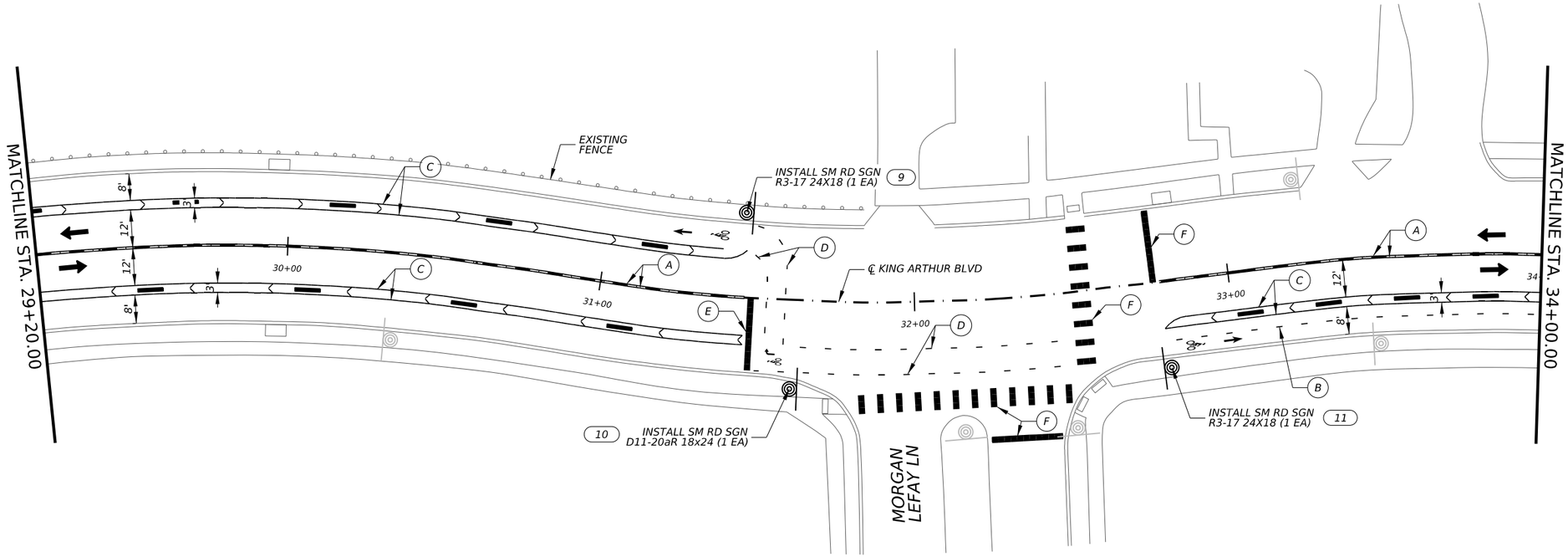

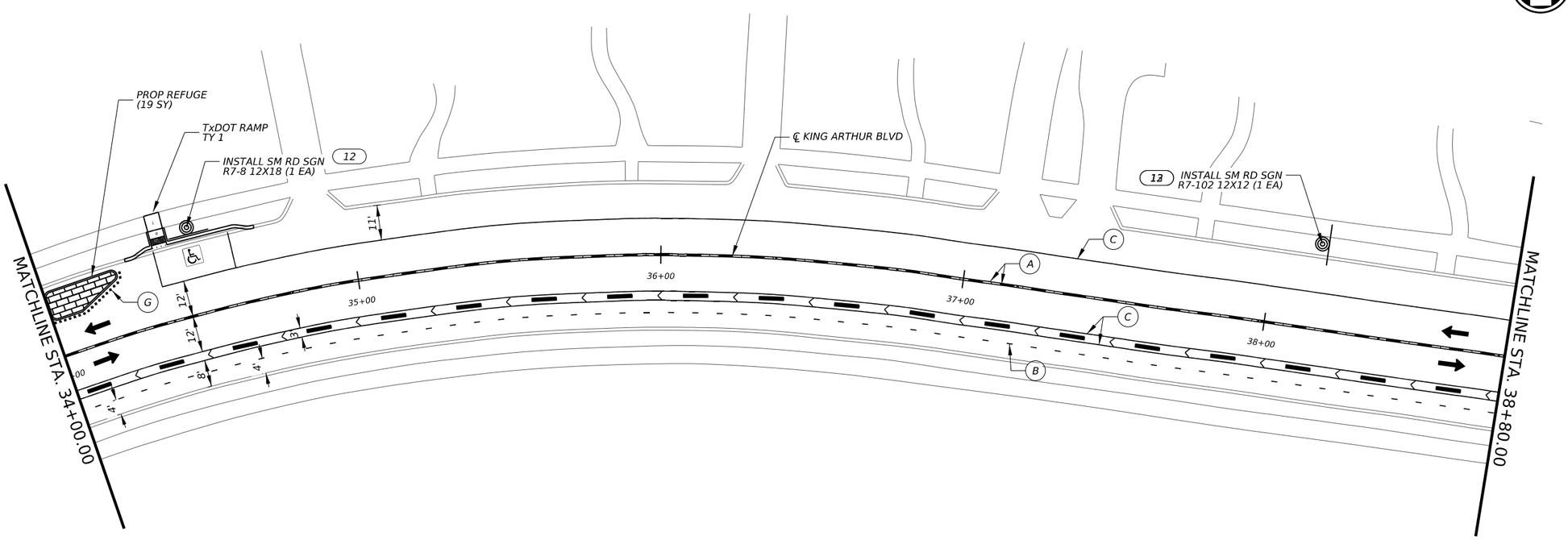

LEGEND

- TRAFFIC FLOW ARROWS
- CONC REMOVAL
- PROPOSED CONC SIDEWALK
- PROPOSED CONC PAVERS
- DETECTABLE WARNING
- BIKE LANE BARRIERS
- SIGN NUMBER
- (A) REFL PAV MRK TY I (Y)4"(SLD)(100MIL) WITH TYP II-A-A SPACED O.C. @ 40'
- (B) REFL PAV MRK TY I (Y)4"(DOT)(100MIL)
- (C) REFL PAV MRK TY I (W)4"(SLD)(100MIL)
- (D) REFL PAV MRK TY I (W)4"(DOT)(100MIL)
- (E) REFL PAV MRK TY I (W)8"(SLD)(100MIL)
- (F) REFL PAV MRK TY I (W)24"(SLD)(100MIL)
- (G) REFL PAV MRKR TY II-C-C @ 20" C.C.
- REFL PAV MRK TY I (W)(ARROW)(100MIL)
- R RAMP (CROSS SLOPE NOT TO EXCEED 2%; LONGITUDINAL NOT TO EXCEED 8.3%)
- L LANDING (SHALL NOT EXCEED 2% SLOPE IN ANY DIRECTION)
- EXISTING SIGN
- PROPOSED SIGN

NOTES

1. DIMENSIONS ARE MEASURED FROM FACE OF CURB UNLESS OTHERWISE SHOWN.
2. EXISTING FEATURES ARE SHOWN SCREENED BACK.
3. PROPOSED REFUGE MEDIANS ARE TO BE 1' FROM FACE OF CURB UNLESS OTHERWISE SHOWN.
4. PROPOSED CONTINENTAL CROSSWALKS TO BE 6' IN WIDTH UNLESS OTHERWISE SHOWN.

0 40 80
SCALE IN FEET

STATE OF TEXAS
S. P. BOOTH
94903
LICENSED
PROFESSIONAL ENGINEER

10/16/2025

LJA Engineering, Inc.
FRN - F-1386

LEWISVILLE
Deep Roots. Broad Wings. Bright Future.

CITY OF LEWISVILLE

KING ARTHUR BLVD
TRAFFIC CALMING
STA 29+20 TO STA 38+30

SHEET 3 OF 8

CONT	SECT	JOB	HIGHWAY
			VARIOUS
DIST	COUNTY		SHEET NO.
	DENTON		31

3:46:27 PM 10/16/2025
S:\MPO\Fran\5482\5482-240\400 Production\4 - Design\Plan Set\3. Rodney\5482PL003.dgn

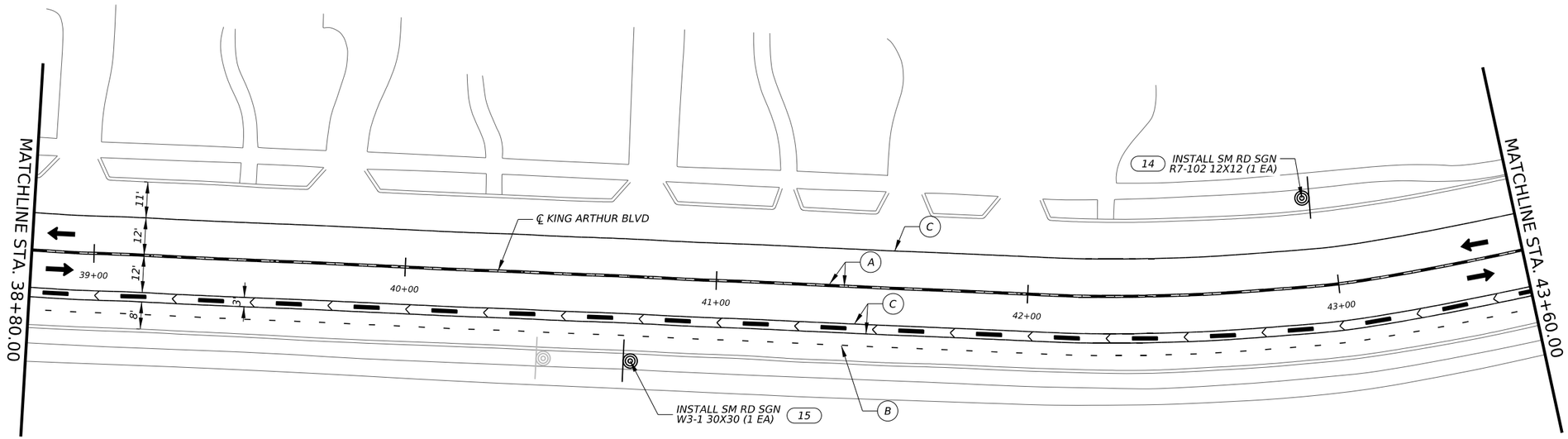

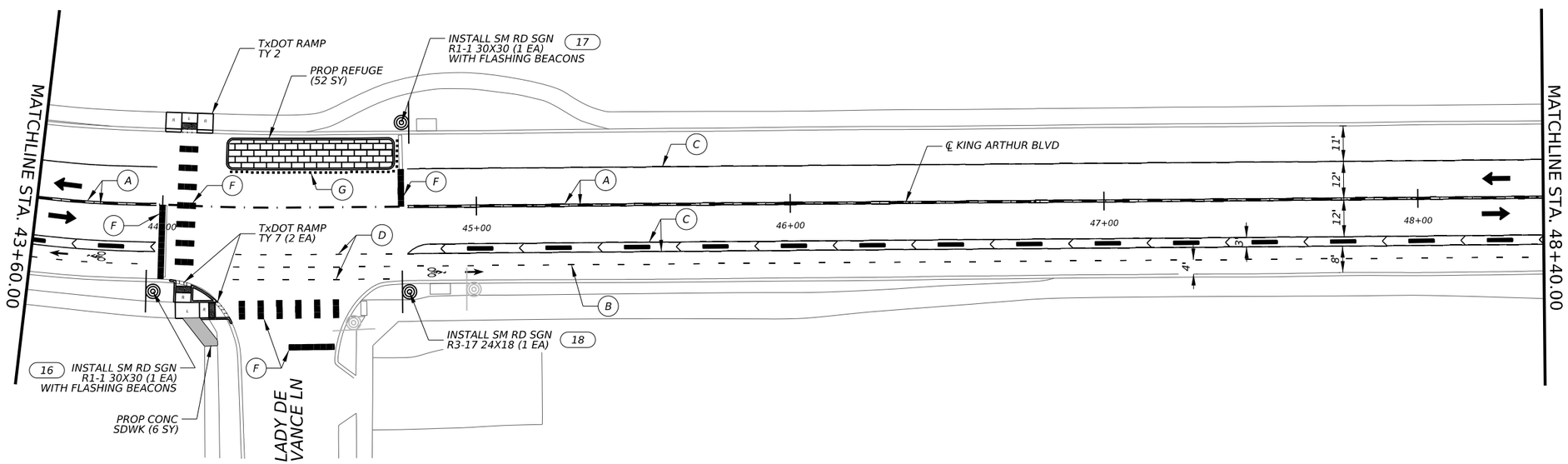

LEGEND

- TRAFFIC FLOW ARROWS
- CONC REMOVAL
- PROPOSED CONC SIDEWALK
- PROPOSED CONC PAVERS
- DETECTABLE WARNING
- BIKE LANE BARRIERS
- (X) SIGN NUMBER
- (A) REFL PAV MRK TY I (Y)4"(SLD)(100MIL) WITH TYP II-A-A SPACED O.C. @ 40'
- (B) REFL PAV MRK TY I (Y)4"(DOT)(100MIL)
- (C) REFL PAV MRK TY I (W)4"(SLD)(100MIL)
- (D) REFL PAV MRK TY I (W)4"(DOT)(100MIL)
- (E) REFL PAV MRK TY I (W)8"(SLD)(100MIL)
- (F) REFL PAV MRK TY I (W)24"(SLD)(100MIL)
- (G) REFL PAV MRKR TY II-C-C @ 20" C.C.
- REFL PAV MRK TY I (W)(ARROW)(100MIL)
- R RAMP (CROSS SLOPE NOT TO EXCEED 2%; LONGITUDINAL NOT TO EXCEED 8.3%)
- L LANDING (SHALL NOT EXCEED 2% SLOPE IN ANY DIRECTION)
- EXISTING SIGN
- PROPOSED SIGN

NOTES

1. DIMENSIONS ARE MEASURED FROM FACE OF CURB UNLESS OTHERWISE SHOWN.
2. EXISTING FEATURES ARE SHOWN SCREENED BACK.
3. PROPOSED REFUGE MEDIANS ARE TO BE 1' FROM FACE OF CURB UNLESS OTHERWISE SHOWN.
4. PROPOSED CONTINENTAL CROSSWALKS TO BE 6' IN WIDTH UNLESS OTHERWISE SHOWN.

0 40 80
SCALE IN FEET

STATE OF TEXAS
S. P. BOOTH
94903
LICENSED
PROFESSIONAL ENGINEER

S. P. Booth 10/16/2025

LJA Engineering, Inc. LJA
FRN - F-1386

LEWISVILLE
Deep Roots. Broad Wings. Bright Future.

CITY OF LEWISVILLE

KING ARTHUR BLVD
TRAFFIC CALMING
STA 38+30 TO STA 48+40

SHEET 4 OF 8

CONT	SECT	JOB	HIGHWAY
			VARIOUS
DIST	COUNTY		SHEET NO.
	DENTON		32

3:46:33 PM 10/16/2025
S:\MPO\Fran\5482\5482-240\400 Production\4 - Design\Plan Set\3. Rodney\5482PL004.dgn

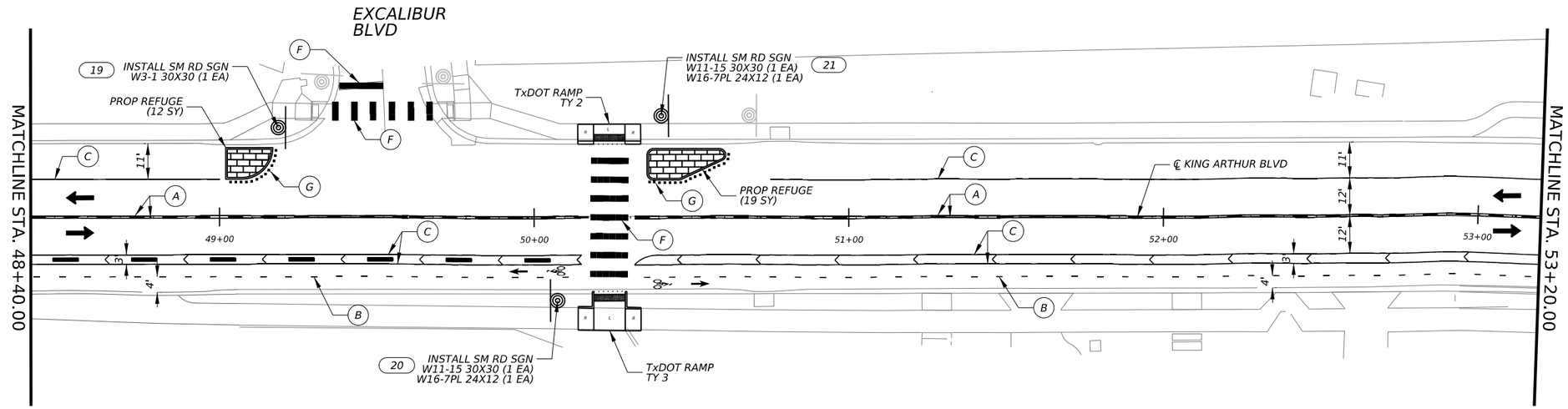

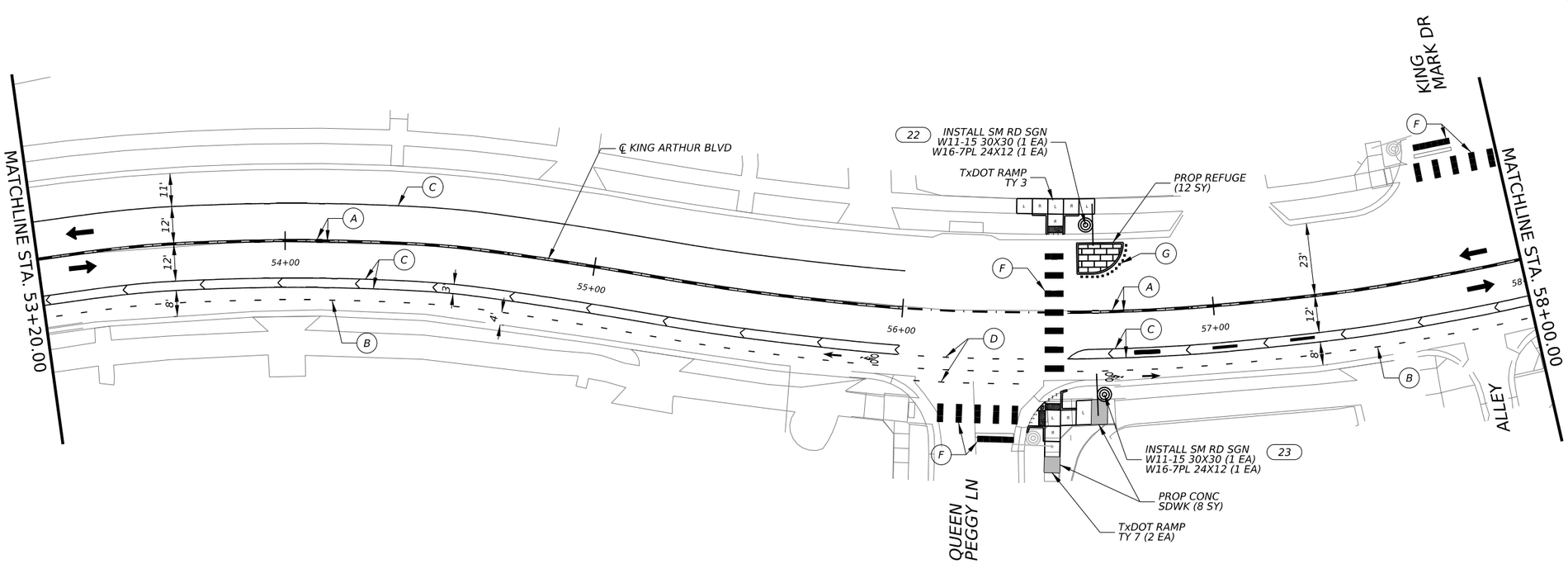

LEGEND

- TRAFFIC FLOW ARROWS
- CONC REMOVAL
- PROPOSED CONC SIDEWALK
- PROPOSED CONC PAVERS
- DETECTABLE WARNING
- BIKE LANE BARRIERS
- SIGN NUMBER
- (A) REFL PAV MRK TY I (Y)4"(SLD)(100MIL) WITH TYP II-A-A SPACED O.C. @ 40'
- (B) REFL PAV MRK TY I (Y)4"(DOT)(100MIL)
- (C) REFL PAV MRK TY I (W)4"(SLD)(100MIL)
- (D) REFL PAV MRK TY I (W)4"(DOT)(100MIL)
- (E) REFL PAV MRK TY I (W)8"(SLD)(100MIL)
- (F) REFL PAV MRK TY I (W)24"(SLD)(100MIL)
- (G) REFL PAV MRKR TY II-C-C @ 20" C.C.
- REFL PAV MRK TY I (W)(ARROW)(100MIL)
- R RAMP (CROSS SLOPE NOT TO EXCEED 2%; LONGITUDINAL NOT TO EXCEED 8.3%)
- L LANDING (SHALL NOT EXCEED 2% SLOPE IN ANY DIRECTION)
- EXISTING SIGN
- PROPOSED SIGN

NOTES

1. DIMENSIONS ARE MEASURED FROM FACE OF CURB UNLESS OTHERWISE SHOWN.
2. EXISTING FEATURES ARE SHOWN SCREENED BACK.
3. PROPOSED REFUGE MEDIANS ARE TO BE 1' FROM FACE OF CURB UNLESS OTHERWISE SHOWN.
4. PROPOSED CONTINENTAL CROSSWALKS TO BE 6' IN WIDTH UNLESS OTHERWISE SHOWN.

0 40 80
SCALE IN FEET

STATE OF TEXAS
S. P. BOOTH
94903
LICENSED
PROFESSIONAL ENGINEER

S. P. Booth 10/16/2025

LJA Engineering, Inc. LJA
FRN - F-1386

LEWISVILLE
Deep Roots. Broad Wings. Bright Future.

CITY OF LEWISVILLE

KING ARTHUR BLVD TRAFFIC CALMING STA 48+40 TO STA 58+00

SHEET 5 OF 8

CONT	SECT	JOB	HIGHWAY
			VARIOUS
DIST	COUNTY		SHEET NO.
	DENTON		33

3:46:40 PM 10/16/2025
S:\Mobility\Proj\5482\5482-240\400 Production\4 - Design\Plan Set\3. Rodney\5482PL005.dgn

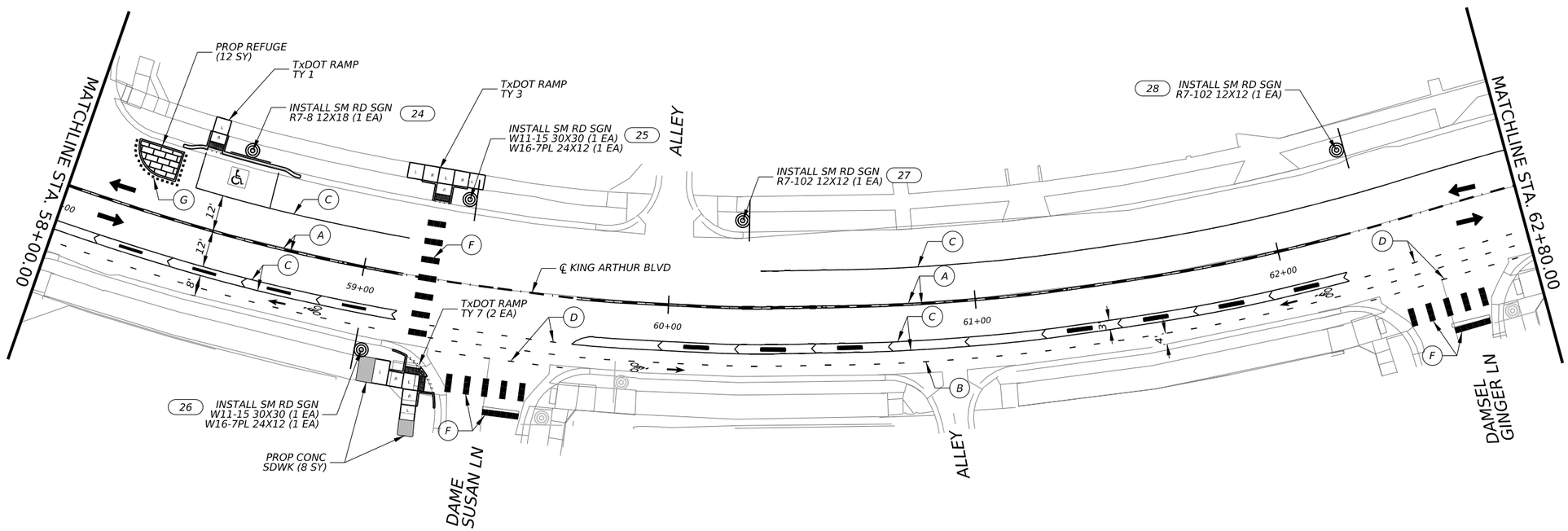

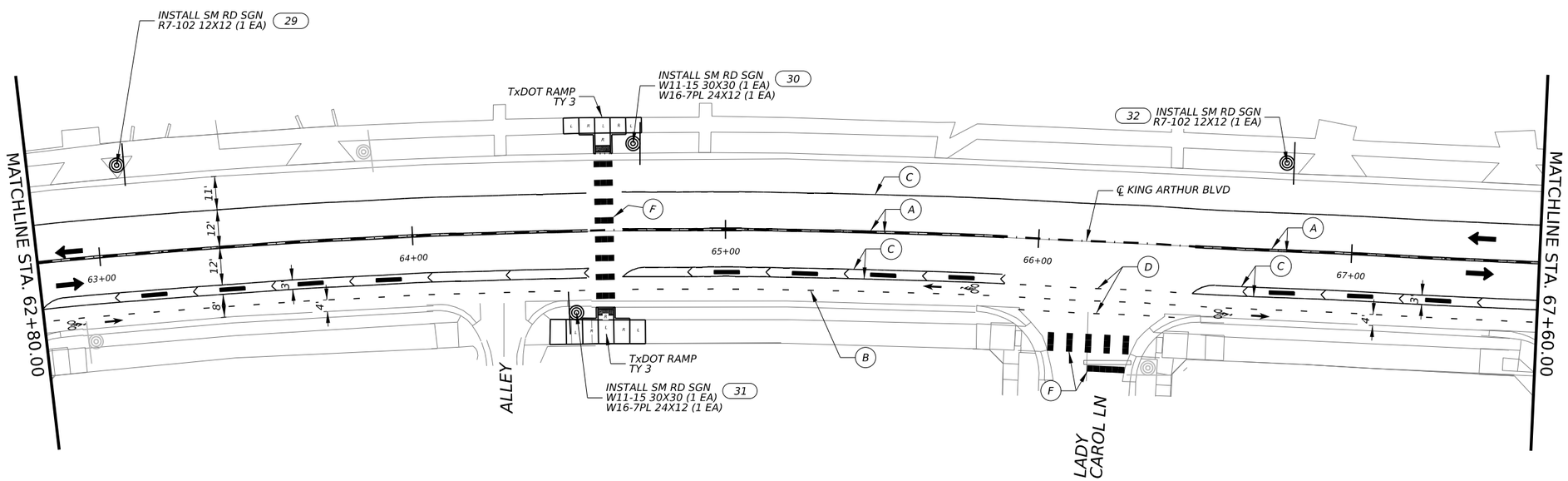

LEGEND

- TRAFFIC FLOW ARROWS
- CONC REMOVAL
- PROPOSED CONC SIDEWALK
- PROPOSED CONC PAVERS
- DETECTABLE WARNING
- BIKE LANE BARRIERS
- SIGN NUMBER
- (A) REFL PAV MRK TY I (Y)4"(SLD)(100MIL) WITH TYP II-A-A SPACED O.C. @ 40'
- (B) REFL PAV MRK TY I (Y)4"(DOT)(100MIL)
- (C) REFL PAV MRK TY I (W)4"(SLD)(100MIL)
- (D) REFL PAV MRK TY I (W)4"(DOT)(100MIL)
- (E) REFL PAV MRK TY I (W)8"(SLD)(100MIL)
- (F) REFL PAV MRK TY I (W)24"(SLD)(100MIL)
- (G) REFL PAV MRKR TY II-C-C @ 20" C.C.
- REFL PAV MRK TY I (W)(ARROW)(100MIL)
- R RAMP (CROSS SLOPE NOT TO EXCEED 2%; LONGITUDINAL NOT TO EXCEED 8.3%)
- L LANDING (SHALL NOT EXCEED 2% SLOPE IN ANY DIRECTION)
- EXISTING SIGN
- PROPOSED SIGN

NOTES

1. DIMENSIONS ARE MEASURED FROM FACE OF CURB UNLESS OTHERWISE SHOWN.
2. EXISTING FEATURES ARE SHOWN SCREENED BACK.
3. PROPOSED REFUGE MEDIANS ARE TO BE 1' FROM FACE OF CURB UNLESS OTHERWISE SHOWN.
4. PROPOSED CONTINENTAL CROSSWALKS TO BE 6' IN WIDTH UNLESS OTHERWISE SHOWN.

0 40 80
SCALE IN FEET

STATE OF TEXAS
S. P. BOOTH
94903
LICENSED PROFESSIONAL ENGINEER
10/16/2025

LJA Engineering, Inc.
FRN - F-1386

LEWISVILLE
Deep Roots. Broad Wings. Bright Future.

CITY OF LEWISVILLE

KING ARTHUR BLVD
TRAFFIC CALMING
STA 58+00 TO STA 67+60

SHEET 6 OF 8

CONT	SECT	JOB	HIGHWAY
			VARIOUS
DIST	COUNTY		SHEET NO.
	DENTON		34

3:46:46 PM 10/16/2025
S:\MHOS-Fran\5482\5482-2401\400 Production\4 - Design\Plan Set\3. Roadway\5482PL\N06.dgn

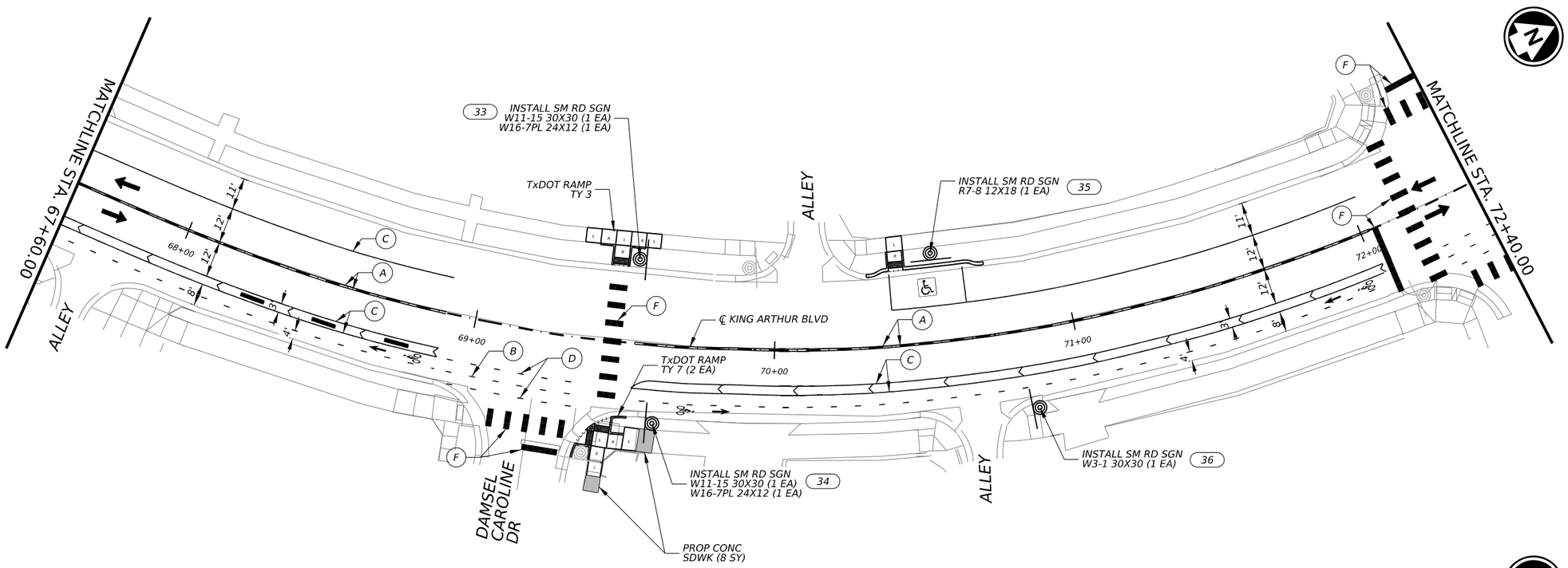

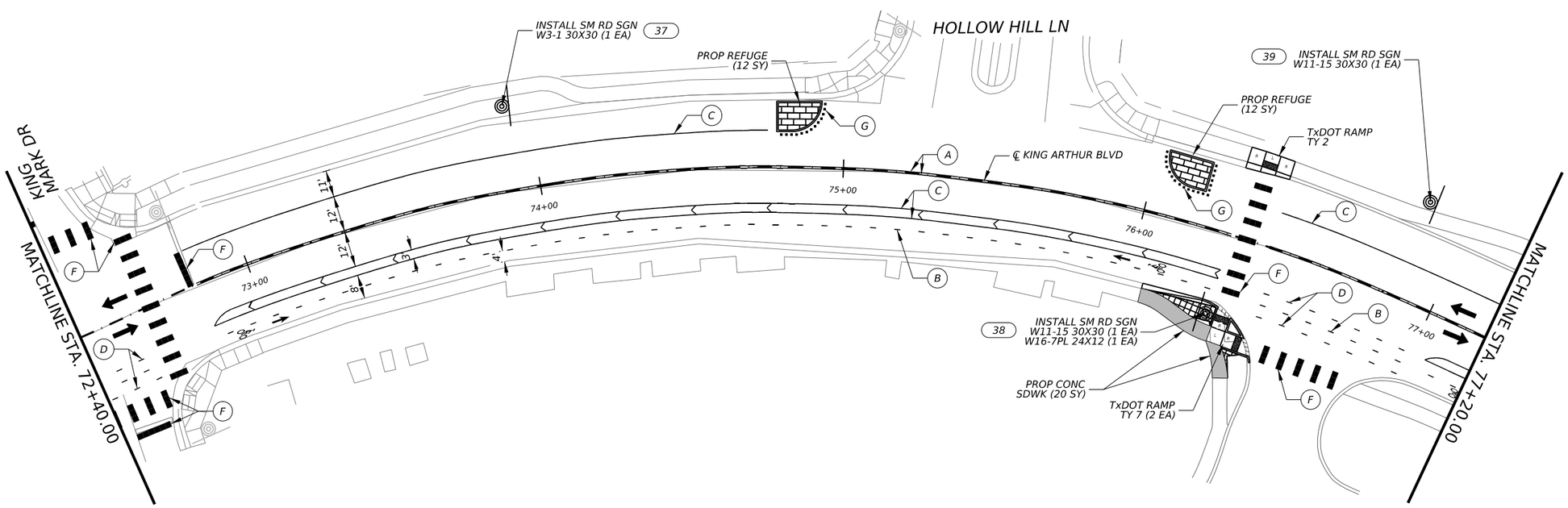

LEGEND

- TRAFFIC FLOW ARROWS
- CONC REMOVAL
- PROPOSED CONC SIDEWALK
- PROPOSED CONC PAVERS
- DETECTABLE WARNING
- BIKE LANE BARRIERS
- SIGN NUMBER
- (A) REFL PAV MRK TY I (Y)4"(SLD)(100MIL) WITH TYP II-A-A SPACED O.C. @ 40'
- (B) REFL PAV MRK TY I (Y)4"(DOT)(100MIL)
- (C) REFL PAV MRK TY I (W)4"(SLD)(100MIL)
- (D) REFL PAV MRK TY I (W)4"(DOT)(100MIL)
- (E) REFL PAV MRK TY I (W)8"(SLD)(100MIL)
- (F) REFL PAV MRK TY I (W)24"(SLD)(100MIL)
- (G) REFL PAV MRKR TY II-C-C @ 20" C.C.
- REFL PAV MRK TY I (W)(ARROW)(100MIL)
- R RAMP (CROSS SLOPE NOT TO EXCEED 2%; LONGITUDINAL NOT TO EXCEED 8.3%)
- L LANDING (SHALL NOT EXCEED 2% SLOPE IN ANY DIRECTION)
- EXISTING SIGN
- PROPOSED SIGN

NOTES

1. DIMENSIONS ARE MEASURED FROM FACE OF CURB UNLESS OTHERWISE SHOWN.
2. EXISTING FEATURES ARE SHOWN SCREENED BACK.
3. PROPOSED REFUGE MEDIANS ARE TO BE 1' FROM FACE OF CURB UNLESS OTHERWISE SHOWN.
4. PROPOSED CONTINENTAL CROSSWALKS TO BE 6' IN WIDTH UNLESS OTHERWISE SHOWN.

0 40 80
SCALE IN FEET

STATE OF TEXAS
S. P. BOOTH
94903
LICENSED
PROFESSIONAL ENGINEER

S. P. Booth 10/16/2025

LJA Engineering, Inc. LJA
FRN - F-1386

LEWISVILLE
Deep Roots. Broad Wings. Bright Future.

CITY OF LEWISVILLE

KING ARTHUR BLVD
TRAFFIC CALMING
STA 67+60 TO STA 77+20

SHEET 7 OF 8

CONT	SECT	JOB	HIGHWAY
			VARIOUS
DIST	COUNTY		SHEET NO.
	DENTON		35

3:46:51 PM 10/16/2025
S:\NHQ-Fron\5482\5482-2401\400 Production\4 - Design\Plan Set\3. Roadway\5482PL107.dgn

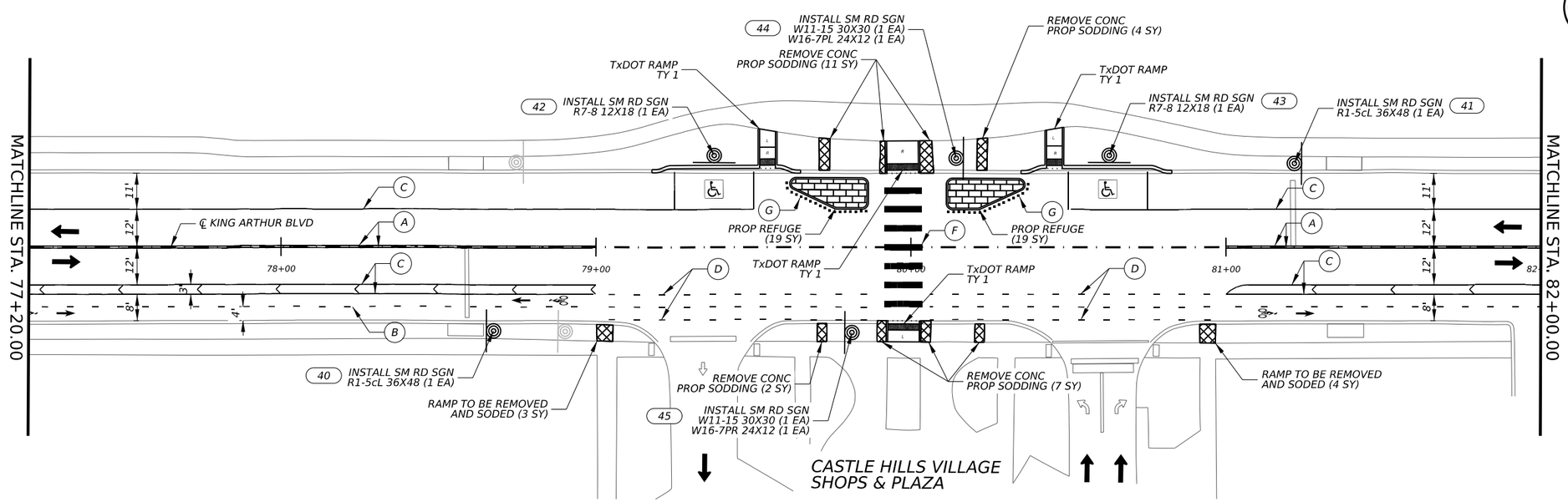

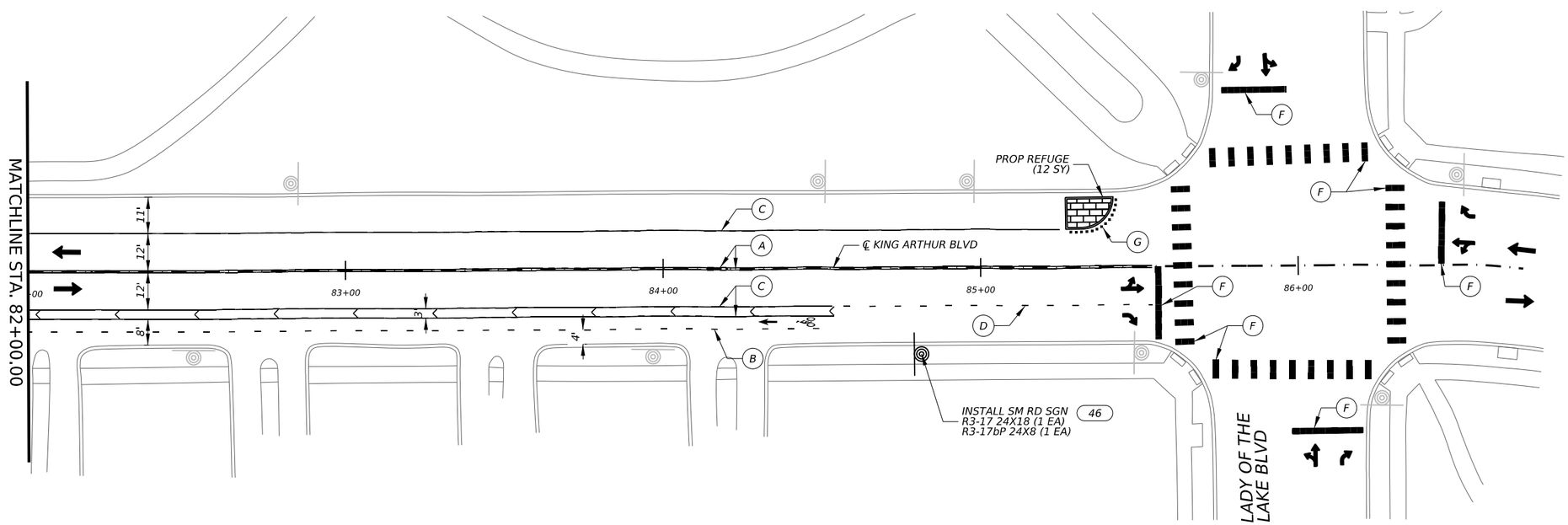

LEGEND

- TRAFFIC FLOW ARROWS
- CONC REMOVAL
- PROPOSED CONC SIDEWALK
- PROPOSED CONC PAVERS
- DETECTABLE WARNING
- BIKE LANE BARRIERS
- SIGN NUMBER
- (A) REFL PAV MRK TY I (Y)4"(SLD)(100MIL) WITH TYP II-A-A SPACED O.C. @ 40'
- (B) REFL PAV MRK TY I (Y)4"(DOT)(100MIL)
- (C) REFL PAV MRK TY I (W)4"(SLD)(100MIL)
- (D) REFL PAV MRK TY I (W)4"(DOT)(100MIL)
- (E) REFL PAV MRK TY I (W)8"(SLD)(100MIL)
- (F) REFL PAV MRK TY I (W)24"(SLD)(100MIL)
- (G) REFL PAV MRKR TY II-C-C @ 20" C.C.
- REFL PAV MRK TY I (W)(ARROW)(100MIL)
- R RAMP (CROSS SLOPE NOT TO EXCEED 2%; LONGITUDINAL NOT TO EXCEED 8.3%)
- L LANDING (SHALL NOT EXCEED 2% SLOPE IN ANY DIRECTION)
- EXISTING SIGN
- PROPOSED SIGN

NOTES

1. DIMENSIONS ARE MEASURED FROM FACE OF CURB UNLESS OTHERWISE SHOWN.
2. EXISTING FEATURES ARE SHOWN SCREENED BACK.
3. PROPOSED REFUGE MEDIANS ARE TO BE 1' FROM FACE OF CURB UNLESS OTHERWISE SHOWN.
4. PROPOSED CONTINENTAL CROSSWALKS TO BE 6' IN WIDTH UNLESS OTHERWISE SHOWN.

0 40 80
SCALE IN FEET

STATE OF TEXAS
S. P. BOOTH
94903
LICENSED
PROFESSIONAL ENGINEER

10/16/2025

LJA Engineering, Inc.
FRN - F-1386

LEWISVILLE
Deep Roots. Broad Wings. Bright Future.

CITY OF LEWISVILLE

KING ARTHUR BLVD
TRAFFIC CALMING
STA 77+20 TO END PROJECT

SHEET 8 OF 8

CONT	SECT	JOB	HIGHWAY
			VARIOUS
DIST	COUNTY		SHEET NO.
	DENTON		36

3:46:56 PM 10/16/2025
S:\HHOU-Fran\5482\5482-240\400 Production\4 - Design\Plan Set\3. Rodney\5482PL008.dgn

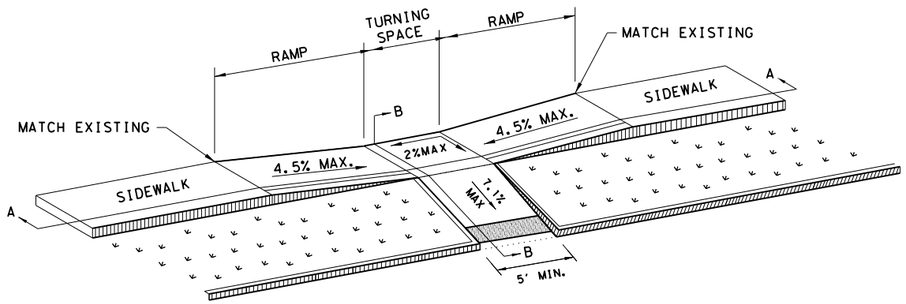

MID-BLOCK RAMP DETAIL
NOT TO SCALE

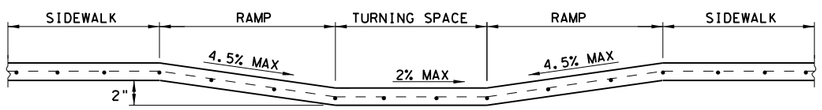

SECTION VIEW DETAIL A-A
NOT TO SCALE

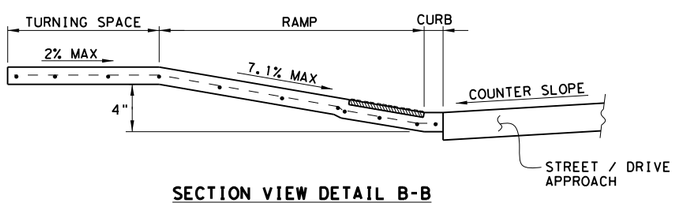

SECTION VIEW DETAIL B-B
NOT TO SCALE

GENERAL NOTES

1. All slopes shown are maximum allowable. Adjust curb ramp length or grade of approach sidewalks as directed.
2. Maximum allowable cross slope on sidewalk and curb ramp surfaces is 2%.
3. Turning Spaces shall be 5'x 5' minimum. Cross slope shall be maximum 2%.
4. Place concrete at a minimum depth of 5" for ramps.
5. Furnish and install No. 3 reinforcing steel bars at 18" o.c. both ways, unless otherwise directed.
6. Provide a smooth transition where the curb ramps connect to the street.
7. Ramp from curb to turning space should rise approximately 4 inches.
8. Turning space shall be 2 inches below grade.
9. Connector from turning space to sidewalk tie in shall be maximum 3.3%.

STATE OF TEXAS
S. P. BOOTH
94903
LICENSED
PROFESSIONAL ENGINEER

10/16/2025

LJA Engineering, Inc.
FRN - F-1386

LEWISVILLE
Deep Roots. Broad Wings. Bright Future.

CITY OF LEWISVILLE

MID-BLOCK RAMP DETAIL

SHEET 1 OF 1

VARIOUS

DENTON 37

3:47:00 PM 10/16/2025
S:\WWO-Fern\5482\5482-240\400 Production\4 - Design\Plan Set\3. Roadway\5482RD001.dgn

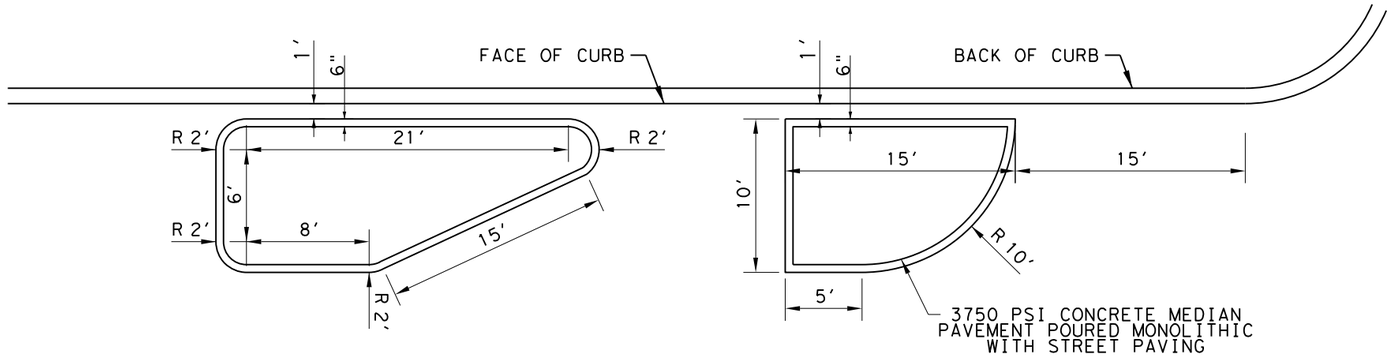

CONCRETE REFUGE MEDIAN, FIRST POUR

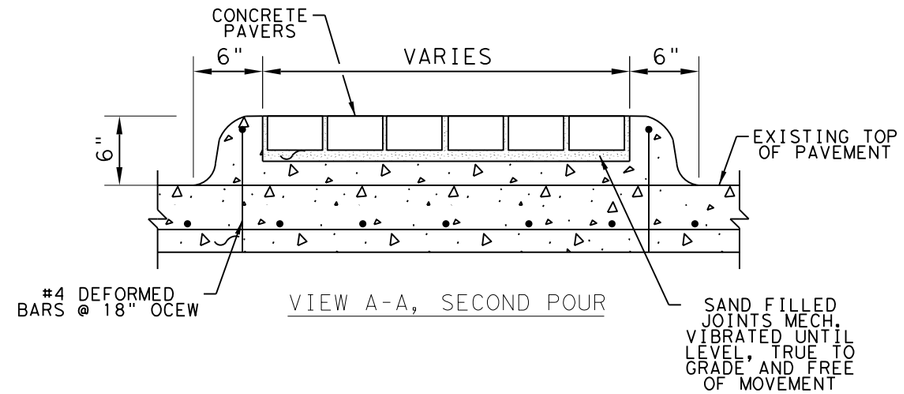

VIEW A-A, SECOND POUR

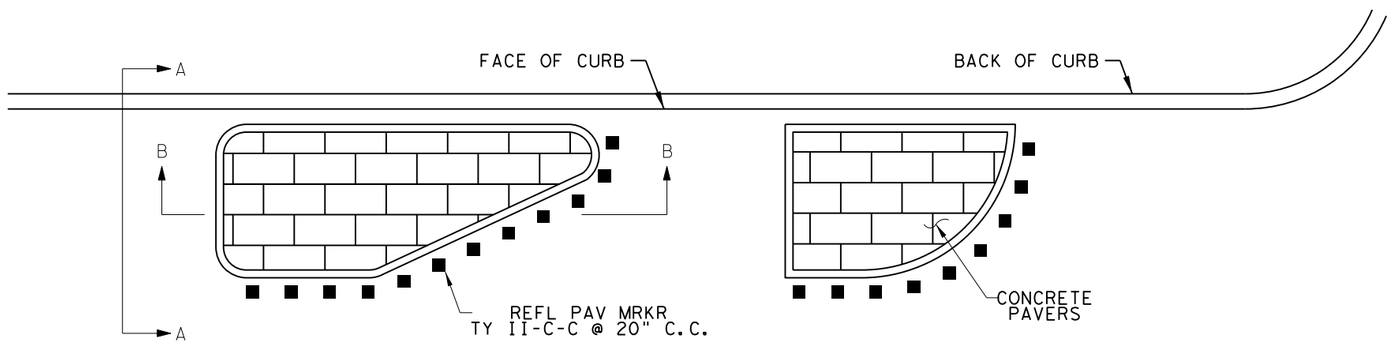

CONCRETE REFUGE MEDIAN, SECOND POUR

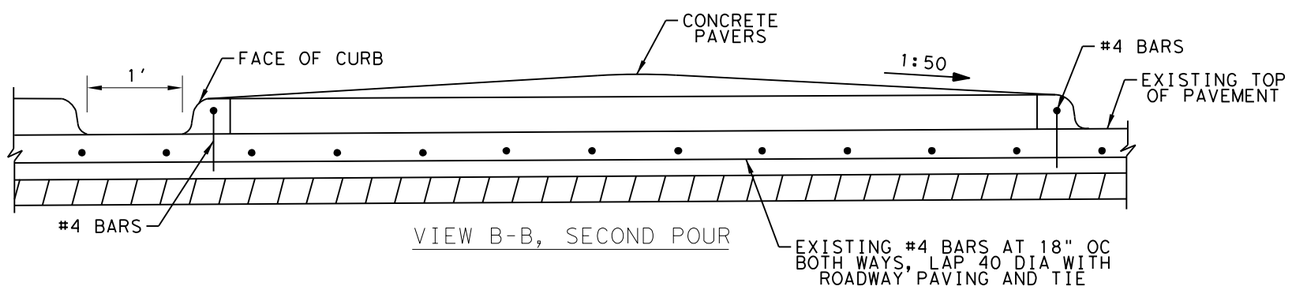

VIEW B-B, SECOND POUR

NOTES:

1. Concrete median rebar to be doweled to existing pavement with #3 rebar at 18 in. spacing.
2. Screed a layer of uncompacted sand to a depth of 1-1-1/2 in. over the existing pavement. Do not use bedding sand for leveling.
3. Spread the sand at a uniform moisture content of 3-7%. Protect onsite-stockpiled sand against rain before spreading.
4. Place paving units on an uncompacted, screeded sand bed to the required laying pattern shown on the plans. Align all joints and provide nominal 1/8-in. gaps between adjacent units.
5. Cut units using a power saw. To fill smaller edge spaces, use a grout mix matching the color of the pavers that consists of one part hydraulic cement to two parts concrete sand.
6. Compact paving units immediately after placement to achieve consolidation of the sand bedding before any traffic is allowed.

STATE OF TEXAS
S. P. BOOTH
94903
LICENSED
PROFESSIONAL ENGINEER

10/16/2025

LJA Engineering, Inc.
FRN - F-1386

LEWISVILLE
Deep Roots. Broad Wings. Bright Future.

CITY OF LEWISVILLE

CURB BUMP OUT DETAIL

SHEET 1 OF 1

VARIOUS

DENTON 38

10/16/2025 3:47:07 PM
\\ljaenvy.com\shares\WHOU-Fran\5482\5482-2401\400 Production\4 - Design\Plan Set\3. Roadway\5482RD002.dgn

DISCLAIMER:
The use of this standard is governed by the "Texas Engineering Practice Act". No warranty of any kind is made by TxDOT for any purpose whatsoever. TxDOT assumes no responsibility for the conversion of this standard to other formats or for incorrect results or damages resulting from its use.

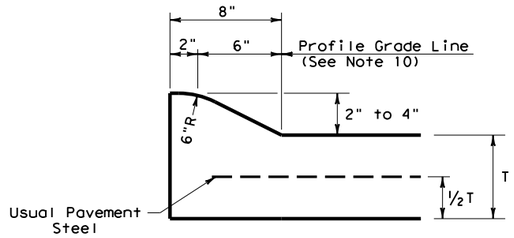

TYPE I CURB (MONOLITHIC)
2" - 4" HEIGHT

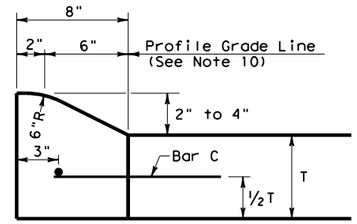

TYPE I CURB
2" - 4" HEIGHT

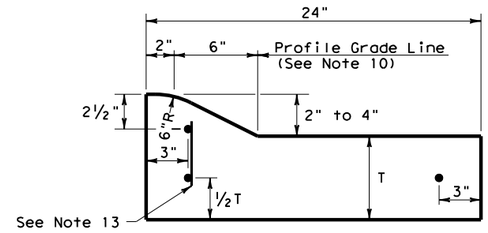

TYPE I CURB AND GUTTER
2" - 4" HEIGHT

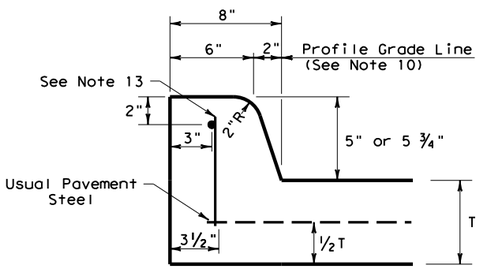

TYPE II CURB (MONOLITHIC)
5" - 5 ¾" HEIGHT

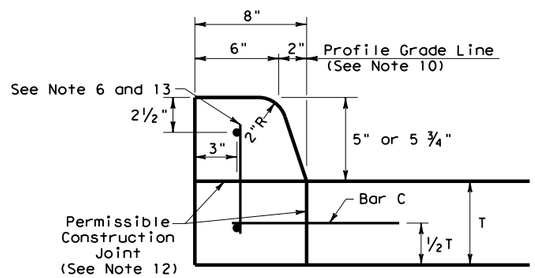

TYPE II CURB
5" - 5 ¾" HEIGHT

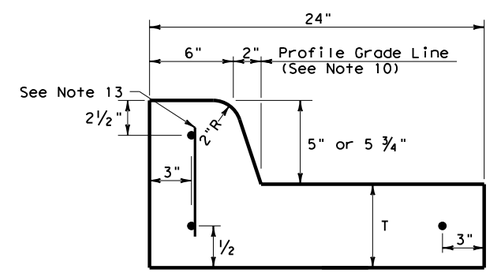

TYPE II CURB AND GUTTER
5" - 5 ¾" HEIGHT

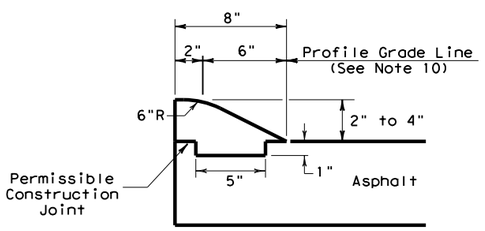

TYPE III CURB (KEYED)
2" - 4" HEIGHT

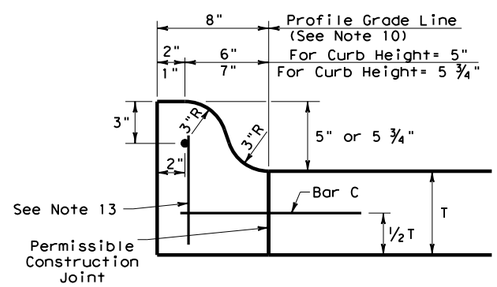

TYPE IIa CURB
5" - 5 ¾" HEIGHT

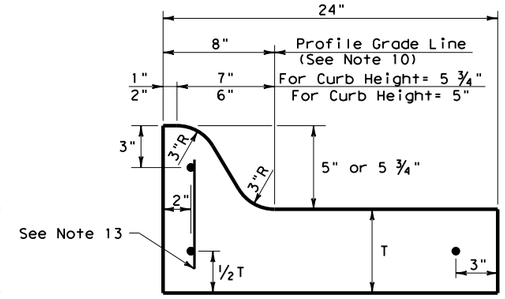

TYPE IIa CURB AND GUTTER
5" - 5 ¾" HEIGHT

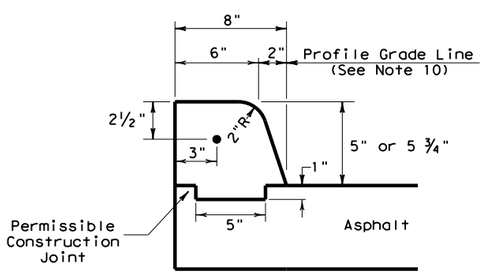

TYPE IV CURB (KEYED)
5" - 5 ¾" HEIGHT

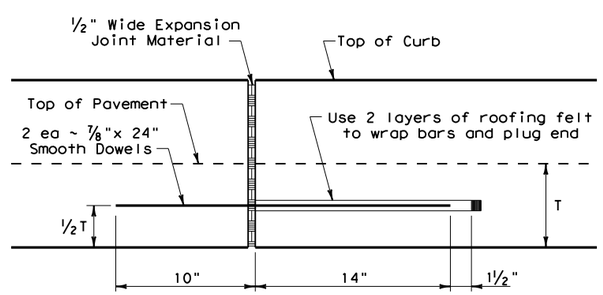

EXPANSION JOINT DETAIL

CURB TRANSITION NOTE:
Field conditions may require a longer or shorter transition, and shall be shown elsewhere in the plans, or as directed by the Engineer.

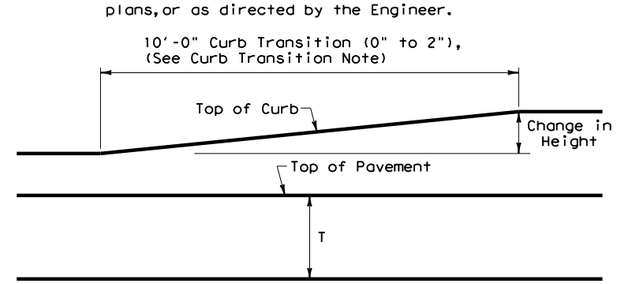

CURB TRANSITION
Note: To be paid for as Highest Curb

GENERAL NOTES

1. All materials and construction shall be in accordance with Item 529, "Concrete Curb, Gutter, and Combined Curb and Gutter."
2. Concrete shall be Class A.
3. When reinforcing bars are used, they shall be No.4 unless otherwise shown. The use of fiber reinforced concrete in lieu of reinforcing steel is acceptable. Use fibers meeting the requirements of DMS 4550, "Fibers for Concrete," and dose fibers in accordance with Material Producers List (MPL) "Fibers for Class A and B Concrete Applications."
4. Round exposed sharp edges with a rounding tool, to a minimum radius of ¼ inch.
5. All existing curbs and driveways to be removed shall be sawed or removed at existing joints.
6. Where concrete curb is to be placed on existing concrete pavement, Bar B may be drilled and grouted in place, or may be inserted into fresh concrete.
7. Expansion and contraction joints shall be constructed to match pavement joints in all curbs and curb and gutter adjacent to jointed concrete pavement. Where placement of curb or curb and gutter is not adjacent to concrete pavement, expansion joints shall be provided at structures, curb returns at streets, and at locations directed by The Engineer.
8. Vertical and horizontal dowel bars and transverse reinforcing bars shall be placed at four feet C~C.
9. Dimension 'T' shown is the thickness of concrete pavement. When curb is installed adjacent to flexible pavement dimension 'T' is 8" maximum.
10. Usual profile grade line. Refer to typical sections and plan-profile sheets for exact locations.
11. One-half inch expansion joint material shall be provided where curb or curb and gutter is adjacent to sidewalk or riprap.
12. When horizontal permissible construction joints are used, the longitudinal pavement steel shall be placed in accordance with pavement details shown elsewhere in the plans. Reinforcing steel for curb section shall then conform to that required for concrete curb.
13. Bar B placement as needed (typic support curb reinforcing steel (

STATE OF TEXAS
S. P. BOOTH
94903
LICENSED
PROFESSIONAL ENGINEER
S. P. Booth 10/16/2025

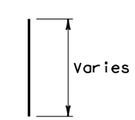

BAR B

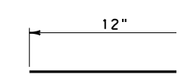

BAR C

Texas Department of Transportation
Design Division Standard

CONCRETE CURB AND CURB AND GUTTER

CCCG-22

FILE: cccg21.dgn	DN: TXDOT	CK: AN	DW: CS	CK: KM
© TxDOT: JUNE 2022	CONT	SECT	JOB	HIGHWAY
REVISIONS				VARIOUS
	DIST	COUNTY		SHEET NO.
		DENTON		39

DATE: 10/16/2025
FILE: S:\WHOU-Tran\5482\5482-2401\400 Production\4 - Design\Plan Set\3. Roadway\Standards\TxDOT\cccg22.dgn

DISCLAIMER:
The use of this standard is governed by the "Texas Engineering Practice Act". No warranty of any kind is made by TxDOT for any purpose whatsoever. TxDOT assumes no responsibility for the conversion of this standard to other formats or for incorrect results or damages resulting from its use.

DATE: 10/16/2025
FILE: S:\WHOU-Tran\5482\5482-2401\400 Production\4 - Design\Plan Set\3. Roadway\Standards\TxDOT\ped18.dgn

TYPE 1

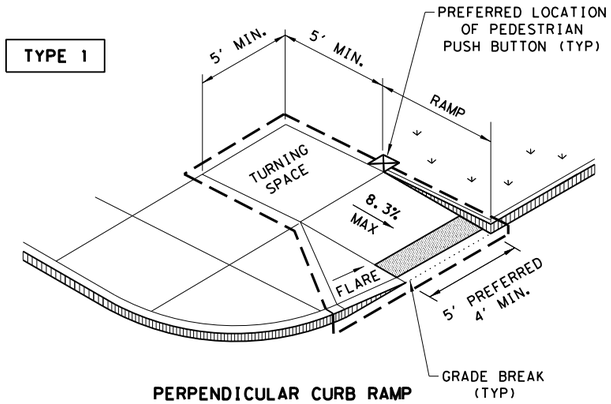

PERPENDICULAR CURB RAMP

TYPE 2

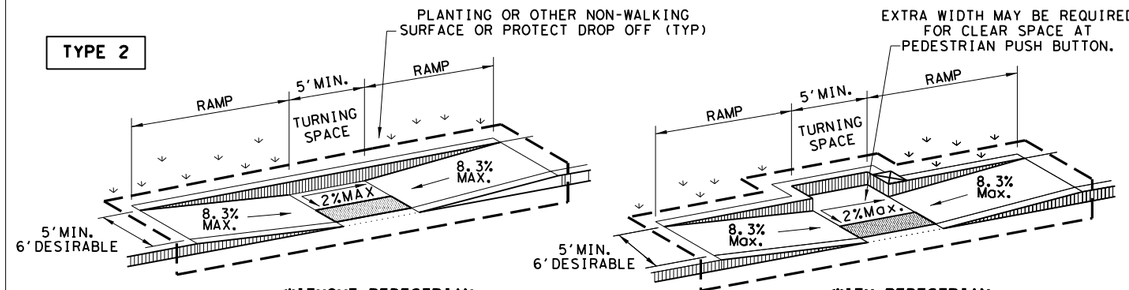

WITHOUT PEDESTRIAN PUSH BUTTON

WITH PEDESTRIAN PUSH BUTTON

PARALLEL CURB RAMP

TYPE 3

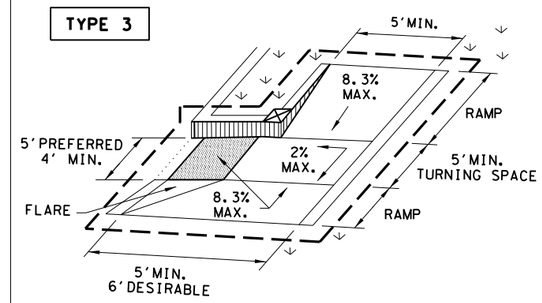

TYPE 6

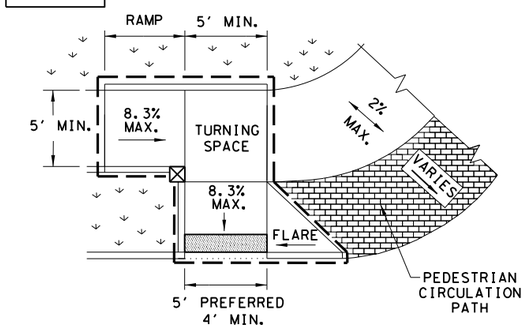

COMBINATION CURB RAMPS

TYPE 20

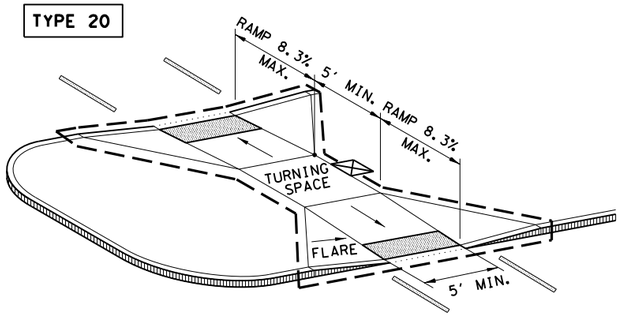

CURB RAMPS AT MEDIAN ISLANDS

TYPE 7

(SIDEWALK SET BACK FROM CURB)

CROSS SLOPE NOT TO EXCEED 2% ON ANY PORTION OF RAMP, TURNING SPACE OR TRANSITION TO STREET.

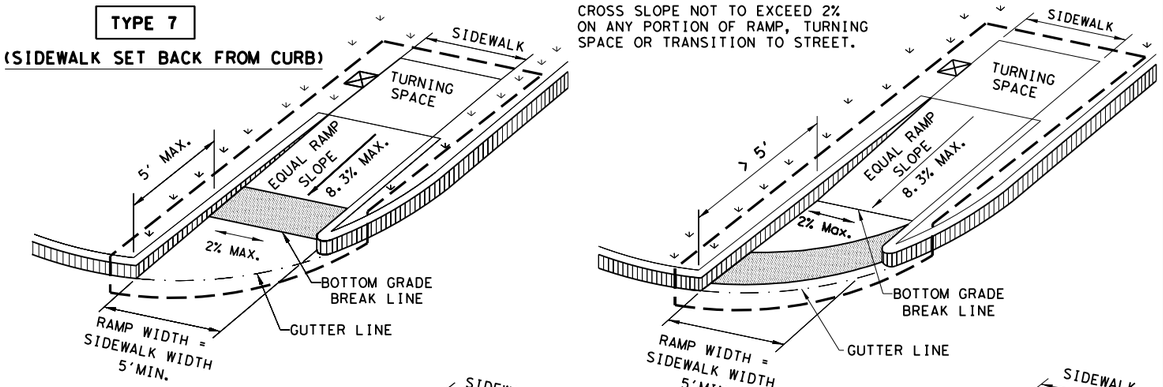

TYPE 10

(SIDEWALK ADJACENT TO CURB)

CROSS SLOPE NOT TO EXCEED 2% ON ANY PORTION OF RAMP, TURNING SPACE OR TRANSITION TO STREET.

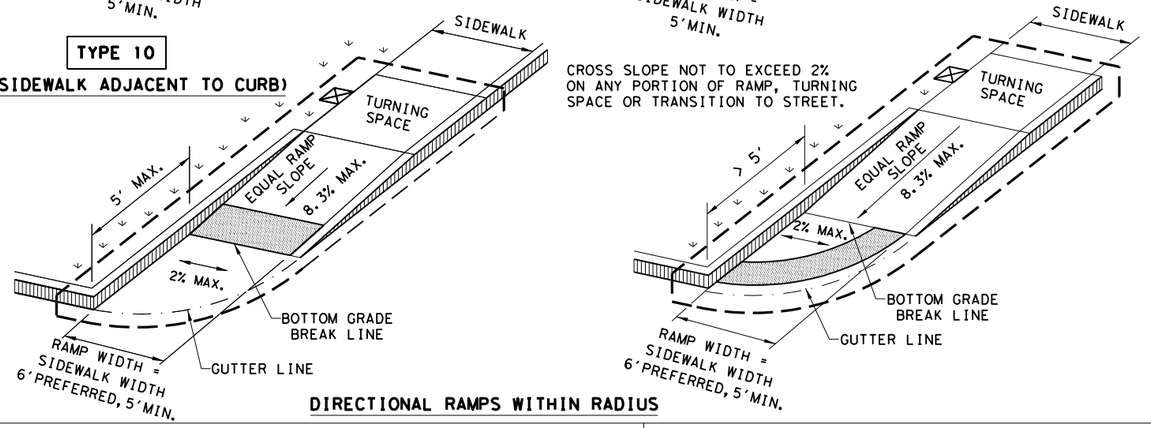

DIRECTIONAL RAMPS WITHIN RADIUS

TYPE 5

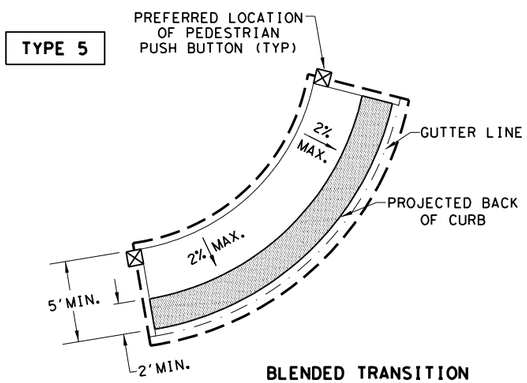

BLENDED TRANSITION
(FLUSH LANDING)

TYPE 21

INSTALL DETECTABLE WARNING SURFACE AT EACH END OF THE CUT-THROUGH RAMP WITH A MINIMUM 2' USUAL SIDEWALK SURFACE BETWEEN. IF MEDIAN IS LESS THAN 6' WIDE, ELIMINATE DETECTABLE WARNING SURFACES.

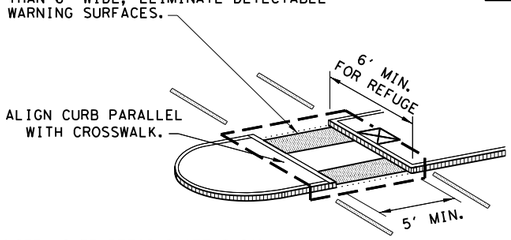

NOTE: CURB DETAILS ARE SHOWN ELSEWHERE IN THE PLANS.

TYPE 22

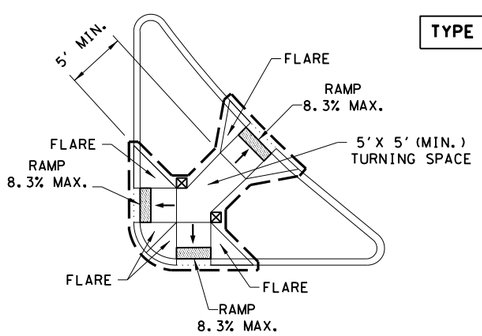

COMBINATION ISLAND RAMPS

BOTTOM GRADE BREAK OF CURB RAMP WILL NORMALLY BE AT GUTTER LINE. SURFACE SLOPES AT GRADE BREAKS SHALL BE FLUSH.

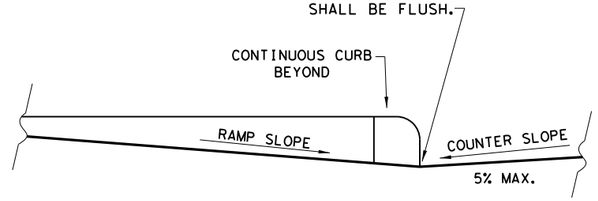

TYPICAL SECTION OF PERPENDICULAR CURB RAMP AT CONNECTION TO ROADWAY

NOTES / LEGEND:

SEE GENERAL NOTES ON SHEET 2 OF 4 FOR MORE INFORMATION.

DENOTES PLANTING OR NON-WALKING SURFACE NOT PART OF PEDESTRIAN CIRCULATION PATH.

GUTTER LINE

DETECTABLE WARNING SURFACE

GRADE BREAK

DENOTES PREFERRED LOCATION OF PEDESTRIAN PUSH BUTTON IF APPLICABLE.

RAMP LIMITS OF PAYMENT

SHEET 1 OF 4

Texas Department of Transportation

Design Division Standard

PEDESTRIAN FACILITIES CURB RAMPS

PED-18

FILE: ped18	DN: TxDOT	CK: KM	CK: PK & JG	
© TxDOT: MARCH, 2002	CONT	SECT	JOB	HIGHWAY
REVISIONS				VARIOUS
REVISED 08,2005 REVISED 06,2012 REVISED 01,2018	DIST	COUNTY		SHEET NO.
		DENTON		40

DISCLAIMER:
The use of this standard is governed by the "Texas Engineering Practice Act". No warranty of any kind is made by TxDOT for any purpose whatsoever. TxDOT assumes no responsibility for the conversion of this standard to other formats or for incorrect results or damages resulting from its use.

DATE: 10/16/2025
FILE: S:\WHOU-Tran\5482\5482-2401\400 Production\4 - Design\Plan Set\3. Roadway\Standards\TxDOT\ped18.dgn

GENERAL NOTES

CURB RAMPS

1. Install a curb ramp or blended transition at each pedestrian street crossing.
2. All slopes shown are maximum allowable. Cross slopes of 1.5% and lesser running should be used. Adjust curb ramp length or grade of approach sidewalks as directed.
3. Maximum allowable cross slope on sidewalk and curb ramp surfaces is 2%.
4. The minimum sidewalk width is 5'. Where the sidewalk is adjacent to the back of curb, a 6' sidewalk width is desirable. Where a 5' sidewalk cannot be provided due to site constraints, sidewalk width may be reduced to 4' for short distances. 5'x 5' passing areas at intervals not to exceed 200' are required.
5. Turning Spaces shall be 5'x 5' minimum. Cross slope shall be maximum 2%.
6. Clear space at the bottom of curb ramps shall be a minimum of 4'x 4' wholly contained within the crosswalk and wholly outside the parallel vehicular travel path.
7. Provide flared sides where the pedestrian circulation path crosses the curb ramp. Flared sides shall be sloped at 10% maximum, measured parallel to the curb. Returned curbs may be used only where pedestrians would not normally walk across the ramp, either because the adjacent surface is planted, substantially obstructed, or otherwise protected.
8. Additional information on curb ramp location, design, light reflective value and texture may be found in the latest draft of the Proposed Guidelines for Pedestrian Facilities in the Public Right of Way (PROWAG) as published by the U.S. Architectural and Transportation Barriers Compliance Board (Access Board).
9. To serve as a pedestrian refuge area, the median should be a minimum of 6' wide, measured from back of curbs. Medians should be designed to provide accessible passage over or through them.
10. Small channelization islands, which do not provide a minimum 5'x 5' landing at the top of curb ramps, shall be cut through level with the surface of the street.
11. Crosswalk dimensions, crosswalk markings and stop bar locations shall be as shown elsewhere in the plans. At intersections where crosswalk markings are not required, curb ramps shall align with theoretical crosswalks unless otherwise directed.
12. Provide curb ramps to connect the pedestrian access route at each pedestrian street crossing. Handrails are not required on curb ramps.
13. Curb ramps and landings shall be constructed and paid for in accordance with Item 531 "Sidewalks".
14. Place concrete at a minimum depth of 5" for ramps, flares and landings, unless otherwise directed.
15. Furnish and install No. 3 reinforcing steel bars at 18" o.c. both ways, unless otherwise directed.
16. Provide a smooth transition where the curb ramps connect to the street.
17. Curbs shown on sheet 1 within the limits of payment are considered part of the curb ramp for payment, whether it is concrete curb, gutter, or combined curb and gutter.
18. Existing features that comply with applicalble standards may remain in place unless otherwise shown on the plans.

DETECTABLE WARNING MATERIAL

19. Curb ramps must contain a detectable warning surface that consists of raised truncated domes complying with PROWAG. The surface must contrast visually with adjoining surfaces, including side flares. Furnish and install an approved cast-in-place dark brown or dark red detectable warning surface material adjacent to uncolored concrete, unless specified elsewhere in the plans.
20. Detectable Warning Materials must meet TxDOT Departmental Materials Specification DMS 4350 and be listed on the Material Producer List. Install products in accordance with manufacturer's specifications.
21. Detectable warning surfaces must be firm, stable and slip resistant.
22. Detectable warning surfaces shall be a minimum of 24 inches in depth in the direction of pedestrian travel, and extend the full width of the curb ramp or landing where the pedestrian access route enters the street.
23. Detectable warning surfaces shall be located so that the edge nearest the curb line is at the back of curb and neither end of that edge is greater than 5 feet from the back of curb. Detectable warning surfaces may be curved along the corner radius.
24. Shaded areas on Sheet 1 of 4 indicate the approximate location for the detectable warning surface for each curb ramp type.

DETECTABLE WARNING PAVERS (IF USED)

25. Furnish detectable warning paver units meeting all requirements of ASTM C-936, C-33. Lay in a two by two unit basket weave pattern or as directed.
26. Lay full-size units first followed by closure units consisting of at least 25 percent (25%) of a full unit. Cut detectable warning paver units using a power saw.

SIDEWALKS

27. Provide clear ground space at operable parts, including pedestrian push buttons. Operable parts shall be placed within unobstructed reach range specified in PROWAG section R406.
28. Place traffic signal or illumination poles, ground boxes, controller boxes, signs, drainage facilities and other items so as not to obstruct the pedestrian access route or clear ground space.
29. Street grades and cross slopes shall be as shown elsewhere in the plans.
30. Changes in level greater than 1/4 inch are not permitted.
31. The least possible grade should be used to maximize accessibility. The running slope of sidewalks and crosswalks within the public right of way may follow the grade of the parallel roadway. Where a continuous grade greater than five percent (5%) must be provided, handrails may be desirable to improve accessibility. Handrails may also be needed to protect pedestrians from potentially hazardous conditions. If provided, handrails shall comply with PROWAG R409.
32. Handrail extensions shall not protrude into the usable landing area or into intersecting pedestrian routes.
33. Driveways and turnouts shall be constructed and paid for in accordance with Item "Intersections, Driveways and Turnouts". Sidewalks shall be constructed and paid for in accordance with Item, "Sidewalks".
34. Sidewalk details are shown elsewhere in the plans.

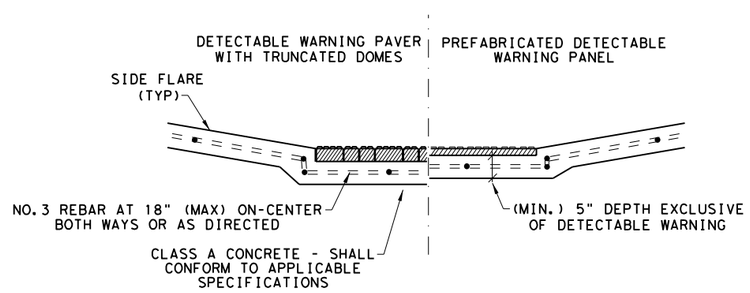

SECTION VIEW DETAIL

CURB RAMP AT DETECTIBLE WARNINGS

DETECTABLE WARNING SURFACE DETAILS

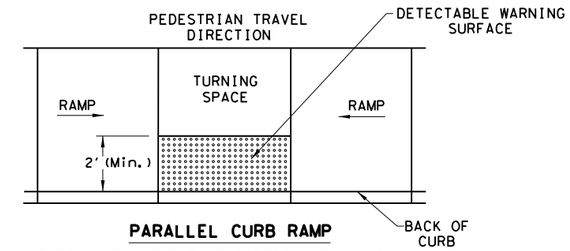

PARALLEL CURB RAMP

TYPICAL PLACEMENT OF DETECTABLE WARNING SURFACE ON LANDING AT STREET EDGE.

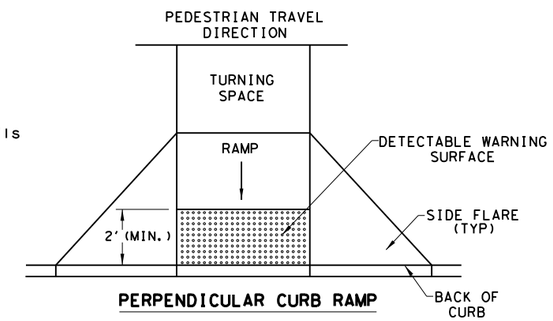

PERPENDICULAR CURB RAMP

TYPICAL PLACEMENT OF DETECTABLE WARNING SURFACE ON SLOPING RAMP RUN.

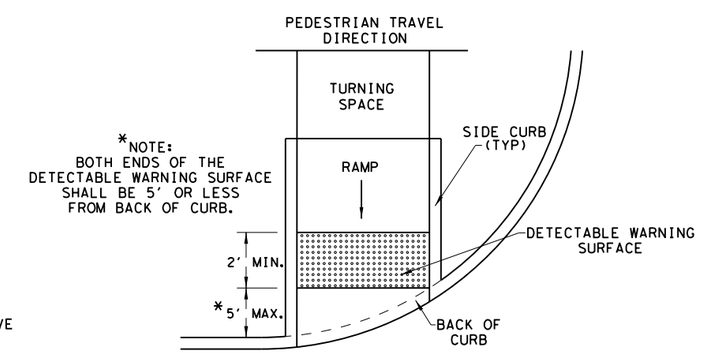

DIRECTIONAL CURB RAMP

TYPICAL PLACEMENT OF DETECTABLE WARNING SURFACE ON SLOPING RAMP RUN.

SHEET 2 OF 4

Texas Department of Transportation — Design Division Standard

PEDESTRIAN FACILITIES CURB RAMPS

PED-18

FILE: ped18	DN: TxDOT	CK: KM	CK: PK & JG	
© TxDOT: MARCH, 2002	CONT	SECT	JOB	HIGHWAY
REVISIONS				VARIOUS
REVISED 08,2005 REVISED 06,2012 REVISED 01,2018	DIST	COUNTY		SHEET NO.
		DENTON		41

SIDEWALK TREATMENT AT DRIVEWAYS

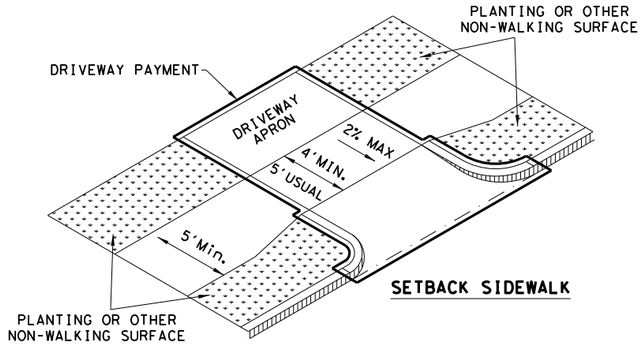

SETBACK SIDEWALK

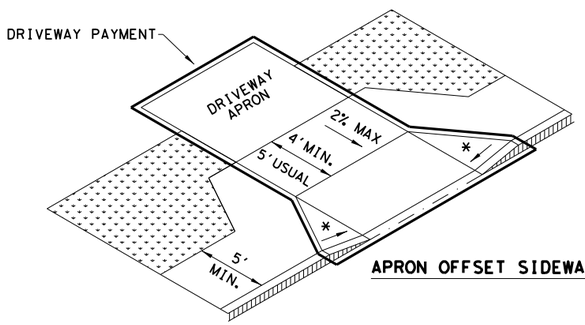

APRON OFFSET SIDEWALK

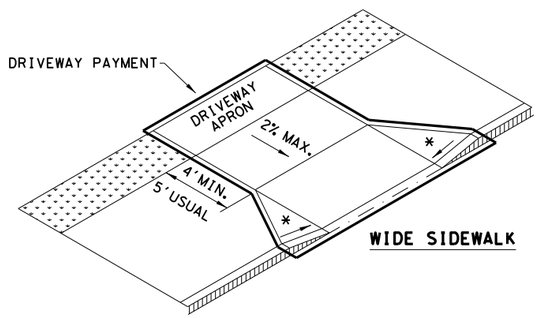

WIDE SIDEWALK

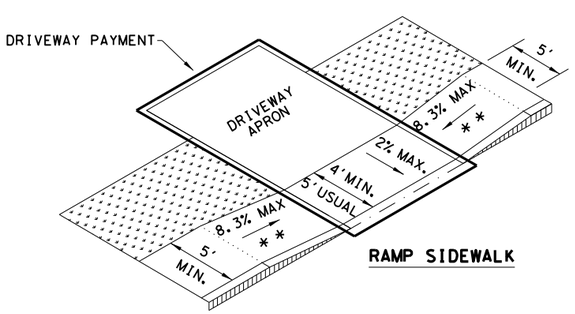

RAMP SIDEWALK

NOTES:

* WHERE DRIVEWAYS CROSS THE PEDESTRIAN ROUTE, SIDES SHALL BE FLARED AT 10% MAX SLOPE.

* * IF CURB HEIGHT IS GREATER THAN 6 INCHES, USE GRADE LESS THAN OR EQUAL TO 5%. HANDRAIL AND DETECTABLE WARNING ARE NOT REQUIRED.

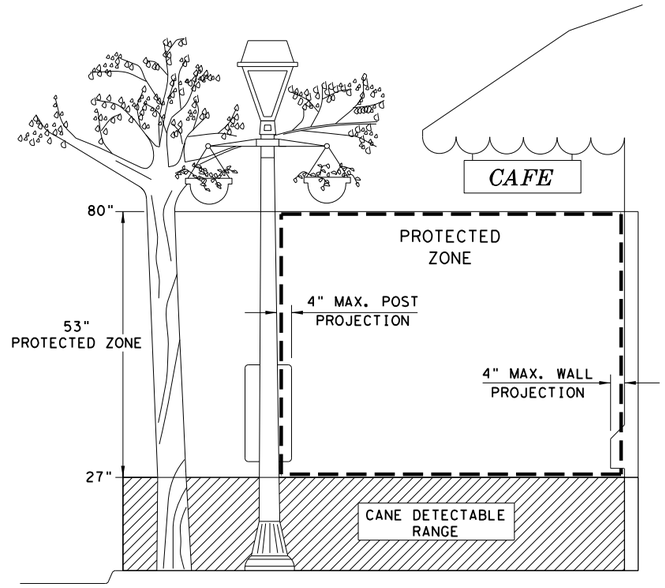

PROTECTED ZONE

NOTE: IN PEDESTRIAN CIRCULATION AREA, MAXIMUM 4" PROJECTION FOR POST OR WALL MOUNTED OBJECTS BETWEEN 27" AND 80" ABOVE THE SURFACE.

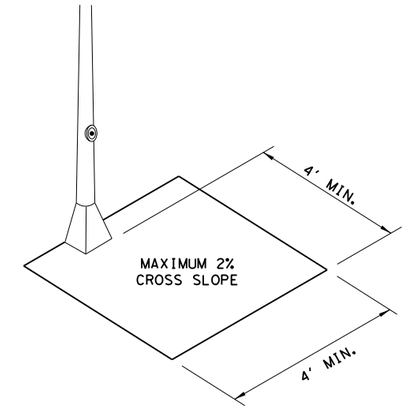

CLEAR SPACE ADJACENT TO PEDESTRIAN PUSH BUTTON

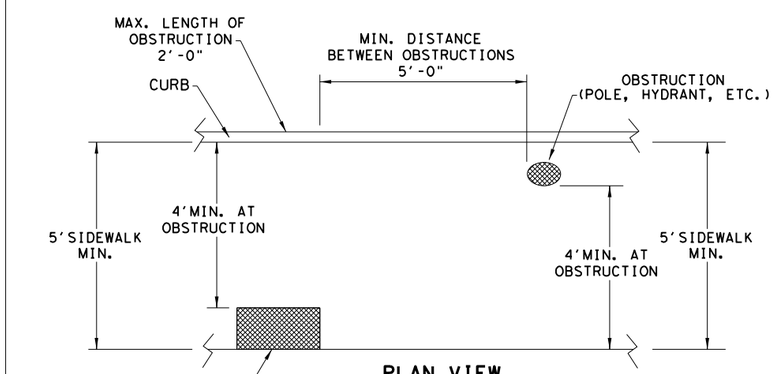

PLAN VIEW

PLACEMENT OF STREET FIXTURES

NOTE: ITEMS NOT INTENDED FOR PUBLIC USE. MINIMUM 4' X 4' CLEAR GROUND SPACE REQUIRED AT PUBLIC USE FIXTURES.

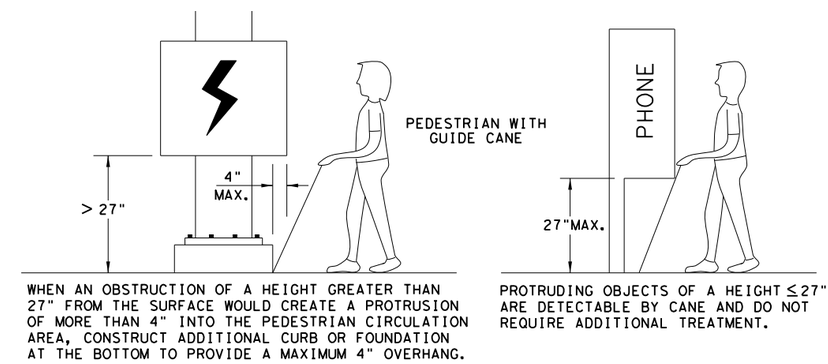

WHEN AN OBSTRUCTION OF A HEIGHT GREATER THAN 27" FROM THE SURFACE WOULD CREATE A PROTRUSION OF MORE THAN 4" INTO THE PEDESTRIAN CIRCULATION AREA, CONSTRUCT ADDITIONAL CURB OR FOUNDATION AT THE BOTTOM TO PROVIDE A MAXIMUM 4" OVERHANG.

PROTRUDING OBJECTS OF A HEIGHT ≤27" ARE DETECTABLE BY CANE AND DO NOT REQUIRE ADDITIONAL TREATMENT.

DETECTION BARRIER FOR VERTICAL CLEARANCE < 80"

Texas Department of Transportation — Design Division Standard

PEDESTRIAN FACILITIES CURB RAMPS

PED-18

FILE: ped18	DN: TxDOT	DW: VP	CK: KM	CK: PK & JG
© TxDOT: MARCH, 2002	CONT	SECT	JOB	HIGHWAY
REVISIONS				VARIOUS
REVISED 08,2005 REVISED 06,2012 REVISED 01,2018	DIST	COUNTY		SHEET NO.
		DENTON		42

DISCLAIMER:
The use of this standard is governed by the "Texas Engineering Practice Act". No warranty of any kind is made by TxDOT for any purpose whatsoever. TxDOT assumes no responsibility for the conversion of this standard to other formats or for incorrect results or damages resulting from its use.

DATE: 10/16/2025
FILE: S:\WHOU-Tran\5482\5482-2401\400 Production\4 - Design\Plan Set\3. Roadway\Standards\TxDOT\ped18.dgn

DISCLAIMER:
The use of this standard is governed by the "Texas Engineering Practice Act". No warranty of any kind is made by TxDOT for any purpose whatsoever. TxDOT assumes no responsibility for the conversion of this standard to other formats or for incorrect results or damages resulting from its use.

DATE: 10/16/2025
FILE: S:\WHOU-Tran\5482\5482-2401\400 Production\4 - Design\Plan Set\3. Roadway\Standards\TxDOT\ped18.dgn

TYPICAL CROSSING LAYOUTS

SEE SHEET 1 OF 4 FOR DETAILS AND DIMENSIONS

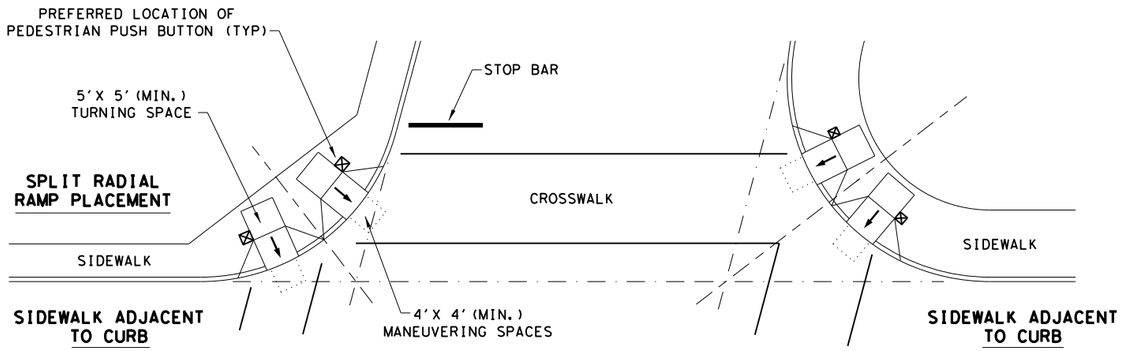

SKEWED INTERSECTION WITH "LARGE" RADIUS

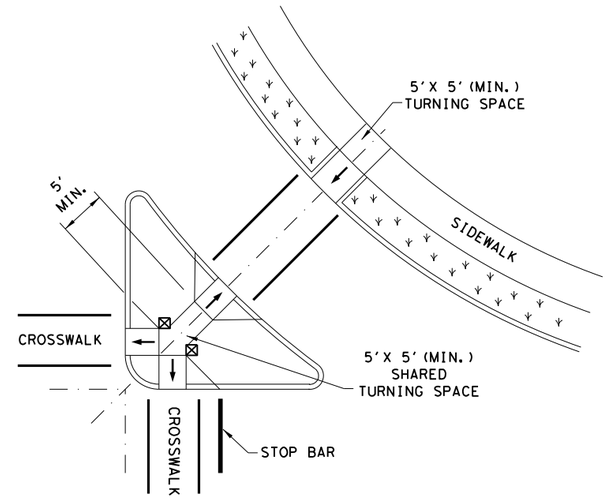

AT INTERSECTION W/FREE RIGHT TURN & ISLAND

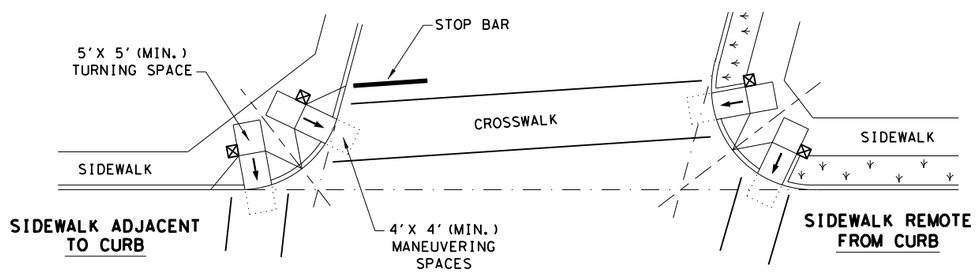

SKEWED INTERSECTION WITH "SMALL" RADIUS

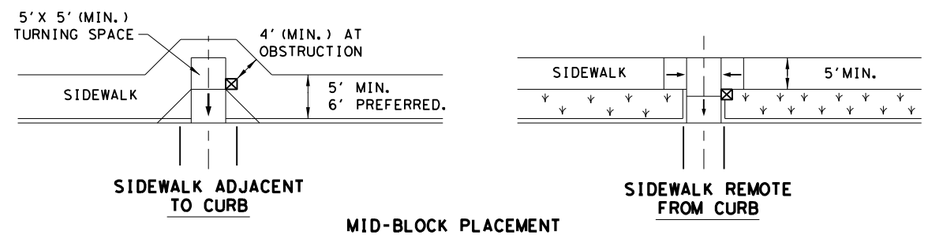

MID-BLOCK PLACEMENT PERPENDICULAR RAMPS

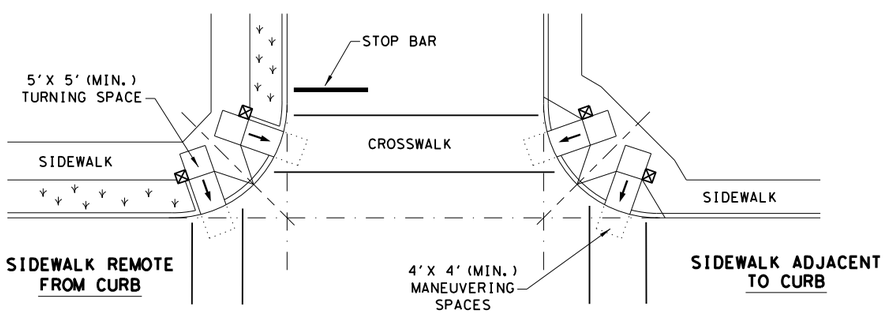

NORMAL INTERSECTION WITH "SMALL" RADIUS

LEGEND:

SHOWS DOWNWARD SLOPE. →

DENOTES PREFERRED LOCATION OF PEDESTRIAN PUSH BUTTON (IF APPLICABLE). ⊠

DENOTES PLANTING OR NON-WALKING SURFACE NOT PART OF PEDESTRIAN CIRCULATION PATH.

SHEET 4 OF 4

Texas Department of Transportation — Design Division Standard

PEDESTRIAN FACILITIES CURB RAMPS

PED-18

FILE: ped18	DN: TxDOT	CK: KM	DW: VP	CK: PK & JG
© TxDOT: MARCH, 2002	CONT	SECT	JOB	HIGHWAY
REVISIONS				VARIOUS
REVISED 08, 2005 REVISED 06, 2012 REVISED 01, 2018	DIST		COUNTY	SHEET NO.
			DENTON	43

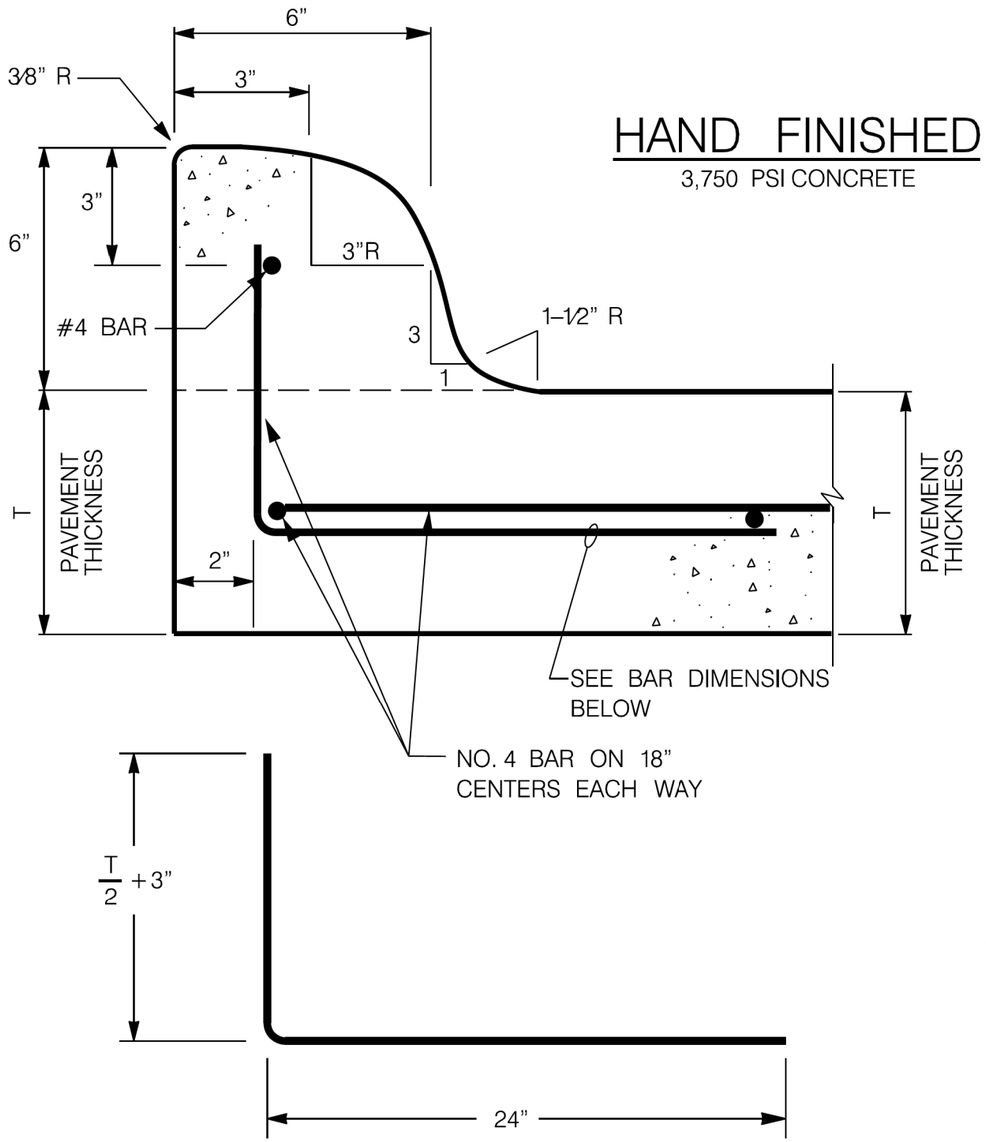

HAND FINISHED

3,750 PSI CONCRETE

BAR DIMENSIONS

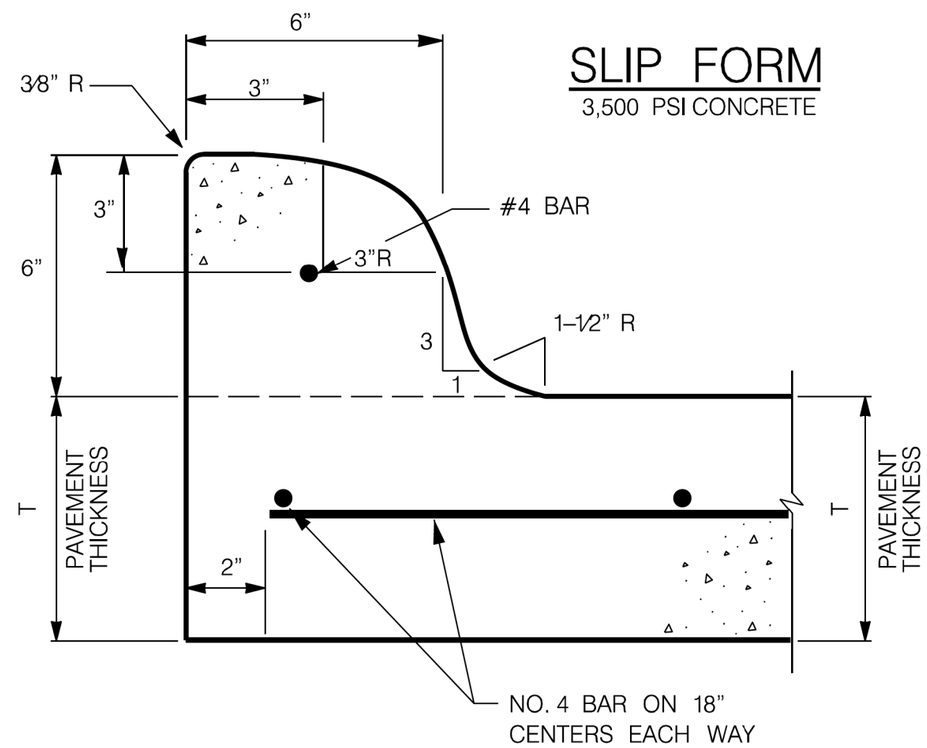

SLIP FORM

3,500 PSI CONCRETE

NOTE:
DETAIL SUBJECT TO CHANGE PER DIRECTION OF CITY OF LEWISVILLE ENGINEERING DIVISION.

LEWISVILLE
Deep Roots. Broad Wings. Bright Future.

Standard Details

6" Integral Curb

Revisions:

No.	Description	Date

Engineering Department

Office No. 972-219-3490

www.cityoflewisville.com

Revised Date: 07-23-25

Sheet: 44

3:47:39 PM 10/16/2025
S:\WWO-Tron\5482\5482-2401\400 Production\4 - Design\Plan Set\3. Roadway\Standards\City\5482-RDWY.dgn

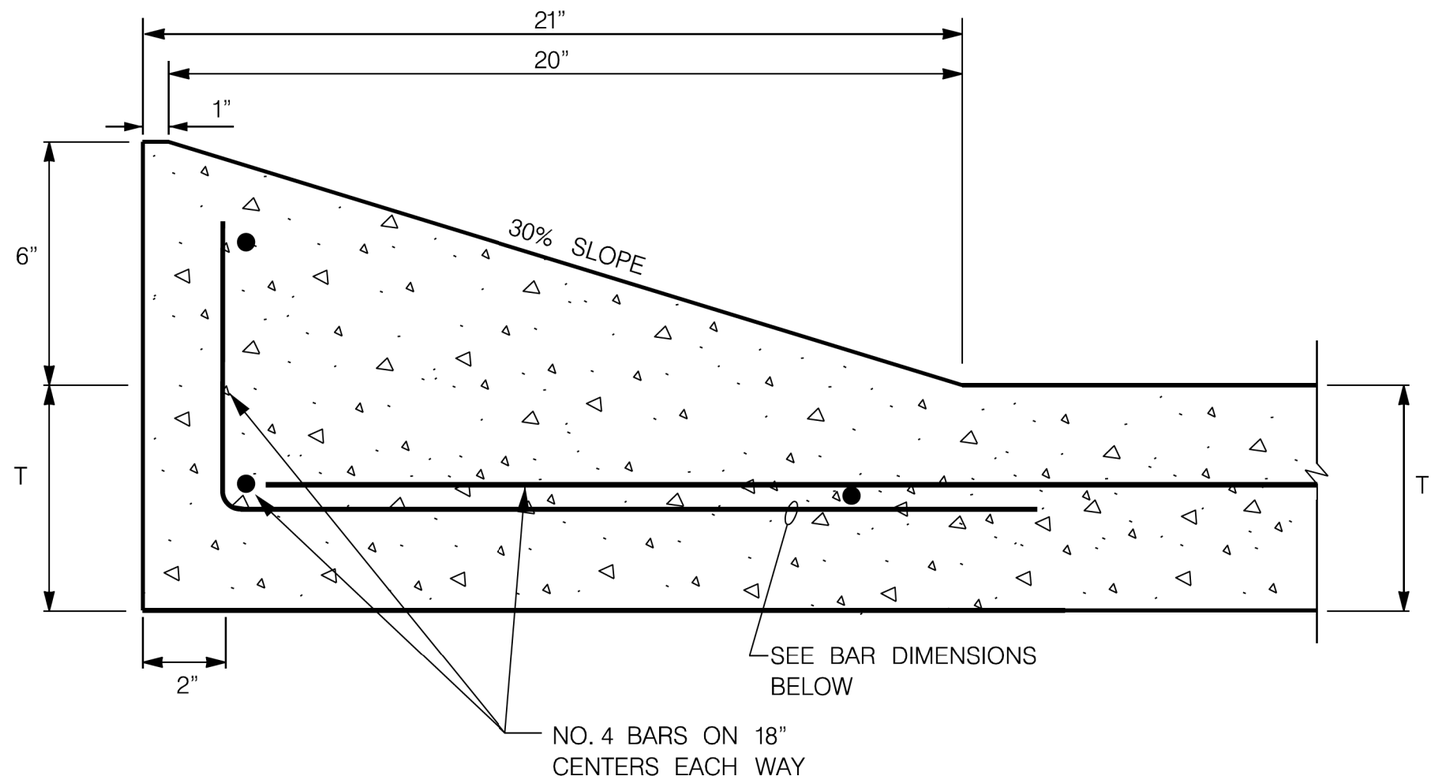

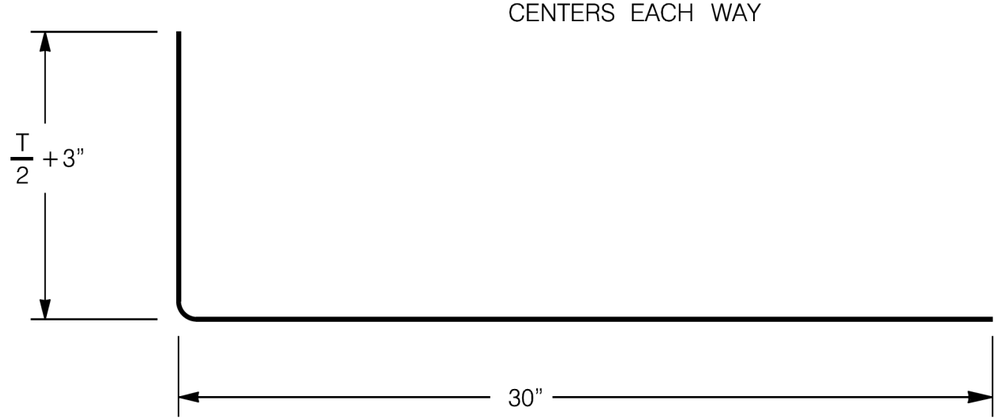

NOTES

1. USE SLIP FORM ONLY.
2. SLIP FORM MUST MATCH STANDARD.
3. SLIP FORM TEMPLATE MUST BE APPROVED BY CITY PRIOR TO USE.

NOTE:
DETAIL SUBJECT TO CHANGE PER DIRECTION OF CITY OF LEWISVILLE ENGINEERING DIVISION.

LEWISVILLE
Deep Roots. Broad Wings. Bright Future.

Standard Details

6” Integral Surmountable Curb Detail

Revisions:

No.	Description	Date

Engineering Department

Office No. 972–219–3490

www.cityoflewisville.com

Revised Date: 08–06–25

Sheet: 45

3:47:42 PM 10/16/2025
S:\WHOO-Fran\5482\5482-2401\400 Production\4 - Design\Plan Set\3. Roadway\Standards\City\5482+RDWY.dgn

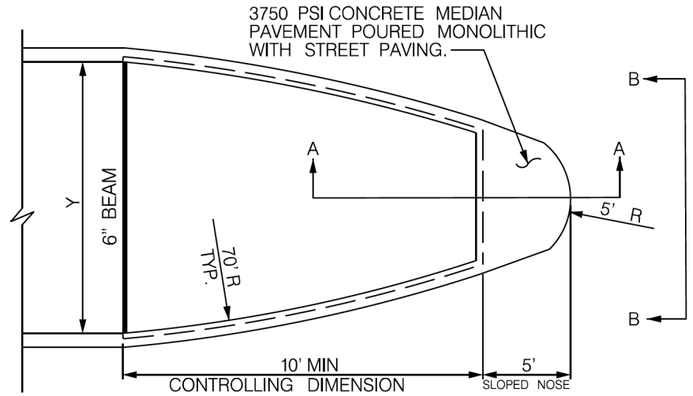

CONCRETE NOSE FOR MEDIAN ISLAND, FIRST POUR

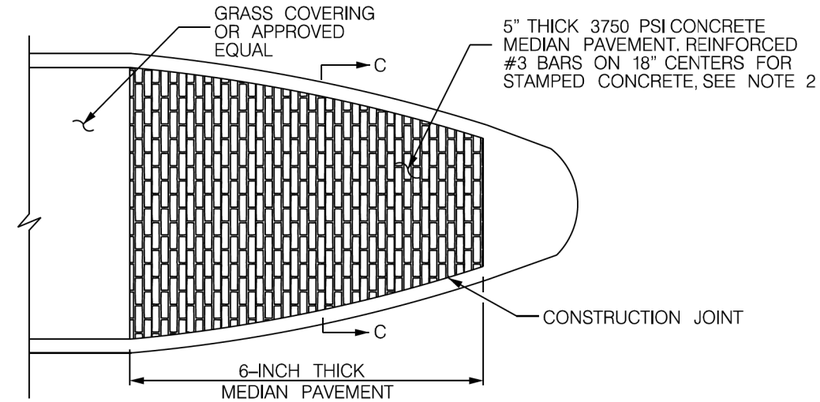

CONCRETE NOSE FOR MEDIAN ISLAND, SECOND POUR

NOTES:

MEDIAN PAVEMENT REQUIRES STAMPED AND PATTERNED CONCRETE WITH COLORING AS FOLLOWS:

1. IN ADDITION TO STANDARD SPECIFICATIONS, STAMPED AND PATTERNED CONCRETE MUST BE IN ACCORDANCE WITH EITHER "PATTERNED CONCRETE INDUSTRIES, INC." OR "BOMINITE CORPORATION" SPECIFICATIONS. THIS INCLUDES REQUIREMENTS FOR EXPANSION JOINTS, JOINT FILLERBOARD, AND CONCRETE MIX.

2. CONTRACTOR MUST SUBMIT A LETTER FROM ONE OF THE ABOVE TOOLING MANUFACTURERS STATING THAT THE INSTALLER OF THE WORK IS TRAINED OR LICENSED TO PERFORM SPECIFIED WORK

3. STAMPED OR PATTERNED CONCRETE (IMPRINTED CONCRETE PAVING TO BE INSTALLED IN ACCORDANCE WITH STANDARD SPECIFICATIONS OF THE ABOVE. THE CONTRACTOR PERFORMING WORK MUST SUBMIT A LETTER FROM ONE OF THE ABOVE TOOLING MANUFACTURERS STATING THAT INSTALLER IS TRAINED OR LICENSED TO PERFORM SPECIFIED WORK.

4. MEDIAN PAVEMENT TO BE STAMPED AND PATTERNED TO EITHER:

   a. PATTERNED CONCRETE INDUSTRIES, INC.
      PATTERN: "RUNNING BOND COBBLE"
      COLOR: A-27 DARK RED,

   b. BOMINITE CORPORATION,
      PATTERN: "RUNNING BOND COBBLESTONE"
      COLOR: B-15 COLONIAL RED

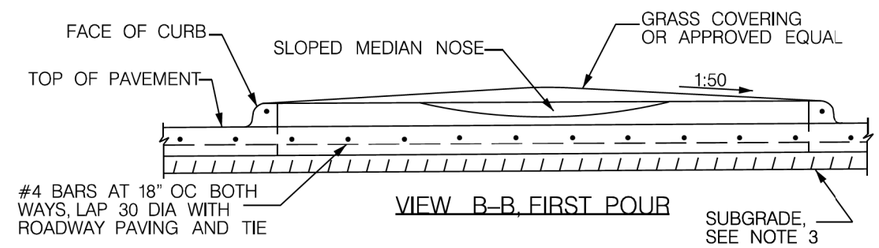

VIEW B-B, FIRST POUR

5. ALL WORK PERFORMED MUST BE BY THE SAME MANUFACTURER

6. ALL MATERIALS USED, INCLUDING CONCRETE MIX MUST BE THE SAME THROUGHOUT THE ENTIRE PROJECT.

7. USE MANUFACTURER RECOMMENDED COLOR HARDENERS AND RELEASE AGENTS.

8. ALL MEASUREMENTS TO THE BACK OF CURB AND IN FEET, UNLESS OTHERWISE SHOWN.

9. COMPACT SUBGRADE AND SAND TO A DENISTY NOT LESS THAN 95% STANDARD PROCTOR.

NOTE:
DETAIL SUBJECT TO CHANGE PER DIRECTION
OF CITY OF LEWISVILLE ENGINEERING DIVISION.

LEWISVILLE
Deep Roots. Broad Wings. Bright Future.

Standard Details

Median Island Pavement Sloped End Nose

Revisions:

No.	Description	Date

Engineering Department

Office No. 972-219-3490

www.cityoflewisville.com

Revised Date: 07-23-25

Sheet: 46

3:47:45 PM 10/16/2025
S:\WHOS-Tron\5482\5482-2401\400 Production\4 - Design\Plan Set\3. Roadway\Standards\City\5482-ROW.dgn

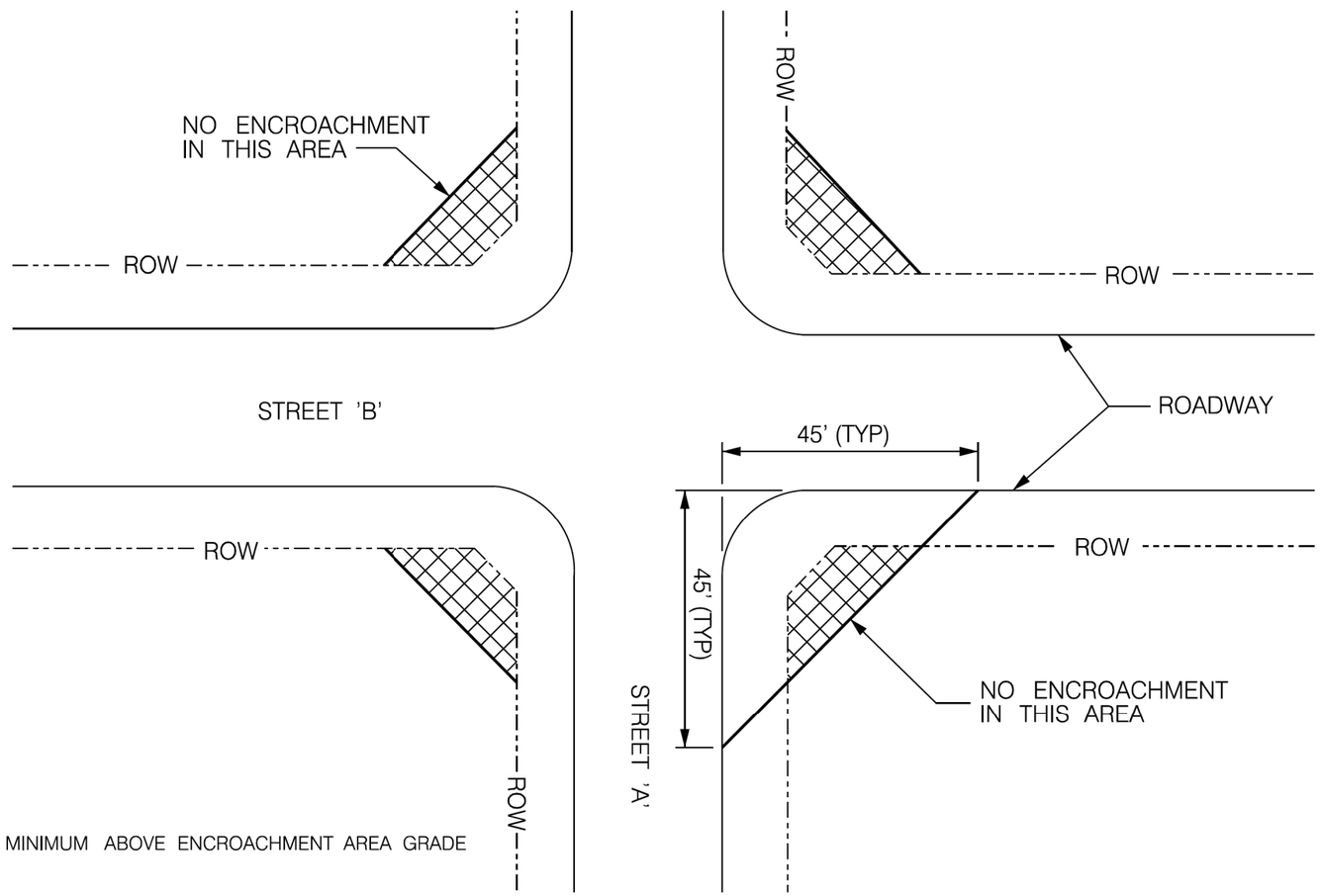

NOTE

TREE OVERHANG 7–FOOT MINIMUM ABOVE ENCROACHMENT AREA GRADE

NOTE:
DETAIL SUBJECT TO CHANGE PER DIRECTION
OF CITY OF LEWISVILLE ENGINEERING DIVISION.

DRAWING NOT TO SCALE

LEWISVILLE
Deep Roots. Broad Wings. Bright Future.

Standard Details

Clear Vision Area

Revisions:

No.	Description	Date

Engineering Department

Office No. 972–219–3490

www.cityoflewisville.com

Revised Date: 07–23–25

Sheet: 47

3:47:48 PM 10/16/2025
S:\MKOU-Fran\5482\5482-240\400 Production\4 - Design\Plan Set\3. Roadway\Standards\City\5482-RDWY.dgn

CONCRETE PAVING GENERAL NOTES

1. REINFORCED CONCRETE PLACEMENT:
   A. PLACE ALL CURBS INTEGRAL WITH PAVEMENT UNLESS OTHERWISE APPROVED BY THE CITY.
   B. CURBS TO MEET SAME COMPRESSIVE STRENGTH AS SPECIFIED FOR PAVEMENT.
   C. BAR LAPS TO BE 30 BAR DIAMETERS.
   D. REINFORCING BARS TO BE SUPPORTED BY CHAIRS OR OTHER DEVICES APPROVED BY THE CITY.
   E. DO NOT USE FLY ASH IN CONCRETE PAVEMENT.

2. SUBGRADE (MINIMUM REQUIREMENTS UNLESS APPROVED BY CITY ENGINEER). SUBGRADE UNDER ALL PAVEMENT TO BE INITIALLY MIXED WITH 8–INCH THICK AND REMIXED WITH 6–INCH THICK AND STABILIZED WITH 6% MINIMUM BY WEIGHT OF HYDRATED LIME (GENERALLY +/– 40 POUNDS PER SQUARE YARD). AND COMPACTED TO A DENSITY NOT LESS THAN 95% STANDARD PROCTOR DENSITY. ALTERNATIVE SUBGRADES SUPPORTED BY LABORATORY TESTS MAY BE SUBMITTED TO THE CITY ENGINEER FOR APPROVAL.

3. HAND POURED CONCRETE TO BE 3,750 PSI AT 28 DAYS

TYPE OF CONCRETE [1]	MINIMUM CEMENTOUS (LB/CY)	7 DAY COMPRESSIVE STRENGTH (PSI)	28 DAY COMPRESSIVE STRENGTH (PSI) [2]	MINIMUM WATER/ CEMENTITIOUS RATIO	COURSE AGGREGATE MAXIMUM SIZE [3]
SIDEWALK [4]	470	1,950	3,000	0.58	1 1/2"
STREET (MACHINE POUR)	517	2,350	3,500	0.53	1 1/2"
STREET (HAND POUR)	564	2,600	3,750	0.49	1 1/2"
	AS DIRECTED BY THE OWNER OR AS SHOWN ON THE PLANS				
HES [5]	752	4,200 [6]	6,500	0.40	1 1/2"

1. ALL EXPOSED HORIZONTAL CONCRETE TO HAVE ENTRAINED AIR.
2. MINIMUM STRENGTH REQUIRED BY OWNER.
3. SMALLER NOMINAL MAXIMUM SIZE AGREGATE MAY BE USED IF STRENGTH REQUIREMENT IS SATISFIED.
4. SIDEWALKS, SEPARATE CURB AND GUTTER, AND 4–INCH MEDIAN PAVEMENT.
5. HIGH EARLY STRENGTH CONCRETE, COMPRESSIVE STRENGTH AT 3 DAYS

CONCRETE USE	AVG. SLUMP (IN)	MAX. SLUMP (IN)
SLIP FORM PAVING	3	4
SIDEWALK, SEPARATE CURB AND GUTTER, AND OTHER MISCELLANEOUS CONCRETE	AS SPECIFIED	

4. SOILS WITH A P.I. OF 20 OR LESS TO BE STABILIZED WITH A CEMENT SLURRY. THE APPLICATION RATE TO BE DETERMINED BY ENGINEER AND APPROVED BY THE CITY ENGINEER.

5. SOILS WITH A P.I. GREATER THAN 20 TO BE STABILIZED WITH LIME SLURRY. THE APPLICATION RATE TO BE DETERMINED BY ENGINEER AND APPROVED BY THE CITY ENGINEER.

6. ALL SOILS MUST BE TESTED BY A QUALIFIED TESTING LABORATORY TO DETERMINE THE SOLUBLE SULFATE LEVELS IN THE SOIL BEFORE APPLYING LIME OR CEMENT STABILIZATION. SOILS WITH ELEVATED SOLUBLE SULFATE CONTENT ARE NOT SUITABLE FOR LIME OR CEMENT TREATMENT BECAUSE OF INCREASED RISK OF SULFATE–INDUCED HEAVE.

SOLUBLE SULFATE	SUBGRADE TREATMENT
<3,000 PPM	SUBGRADE COMPATIBLE WITH LIME OR CEMENT TREATMENT (SEE NOTE 4 & 5)
3,000 PPM TO 8,000 PPM	SUBGRADE IDENTIFIED AS COMPATIBLE WITH LIME OR CEMENT TREATMENT. DESIGN ENGINEER TO CONSULT WITH CITY FOR APPROVAL TO USE LIME TREATED SUBGRADE. REFER TO TxDOT "GUIDELINES FOR MODIFICATION AND STABILIZATION OF SOILS AND BASE FOR USE IN PAVEMENT STRUCTURES" AND "GUIDELINES FOR TREATMENT OF SULFATE–RICH SOILS AND BASES IN PAVEMENT STRUCTURES" FOR MORE INFORMATION.
>8,000 PPM	SUBGRADE IS INCOMPATIBLE WITH LIME OR CEMENT TREATMENT. USE 4–INCH TYPE B HMAC OR 8–INCH FLEXIBLE BASE CRUSHED STONE (TxDOT ITEM 247 GRADE 1). CRUSHED CONCRETE IS NOT ACCEPTABLE

NOTE:
DETAIL SUBJECT TO CHANGE PER DIRECTION OF CITY OF LEWISVILLE ENGINEERING DIVISION.

LEWISVILLE
Deep Roots. Broad Wings. Bright Future.

Standard Details

REINFORCED CONCRETE GENERAL NOTES

Revisions:

No.	Description	Date

Engineering Department

Office No. 972–219–3490

www.cityoflewisville.com

Dated: 07/25/2022

Dated:

Sheet: 48

3:47:51 PM 10/16/2025
S:\WHOU-Fran\5482\5482-2401\400 Production\4 - Design\Plan Set\3. Roadway\Standards\City\5482-RDWY.dgn

TESTING REQUIREMENTS (PER NCTCOG)

1. ALL TESTING ASSOCIATED WITH PUBLIC PAVING MUST BE CONDUCTED BY A CERTIFIED LABORATORY. THE CONTRACTOR IS RESPONSIBLE FOR PAYMENT OF ALL TESTING PERFORMED UNLESS OTHERWISE SPECIFIED.

    a. SULFATE TESTING TO CONFORM WITH ASTM C1580–20
    b. LIME SERIES TESTING TO CONFORM WITH ASTM D6276 AND NCTCOG SECTION 301.2.1.3

2. ALL TESTING ASSOCIATED WITH PRIVATE PAVING MUST BE CONDUCTED BY A CERTIFIED LABORATORY. THE CONTRACTOR IS RESPONSIBLE FOR PAYMENT OF ALL TESTING PERFORMED.

3. EMBANKMENT MATERIALS MUST BE TESTED AND CERTIFIED FOR DENSITY, MOISTURE, GRADATIONS, AND SUITABILITY AS SET FORTH IN THE NCTCOG SPECIFICATIONS FOLLOWING STANDARD TESTING PROCEDURES.

4. PERFORM DENSITY TESTING ON EACH LIFT OR PROPERLY PLACED AND COMPACTED MATERIAL. MINIMUM REQUIREMENTS FOR DENSITY IS 95% OF THE MAXIMUM DENSITY AS DETERMINED BY ASTM D698.

5. MOISTURE CONTENT OF THE MATERIAL TO BE FROM OPTIMUM MOISTURE CONTENT UP TO FOUR (4) % ABOVE THE OPTIMUM MOISURE CONTENT AND NOT LESS THAN 2% UNDER OPTIMUM.

6. THE MINIMUM FREQUENCY OF DENSITY TESTING TO BE 3 (THREE) TESTS PER ONE (1) FOOT OF LOOSE LIFT PER 2,000 (TWO THOUSAND) SQUARE YARDS OF SURFACE AREA, IN ACCORDANCE WITH COG SECTION 203.7.2.

7. RETESTING OF ALL MATERIALS TO BE PERFORMED AT ORIGINAL TEST LOCATION AND AT THE CONTRACTOR'S EXPENSE.

8. GRADATIONS AFTER FINAL MIXING TO BE AS FOLLOWS:

    MINIMUM PASSING 1–INCH LABORATORY SIEVE: 100%
    MINIMUM PASSING NO. 4 LABORATORY SIEVE: 60%
    TESTS TO BE TAKEN EVERY 1,000 SQUARE YARDS.

9. UPON COMPLETING WORK AND BEFORE FINAL ACCEPTANCE AND PAYMENT, PAVEMENT THICKNESS TESTS MAY BE CONDUCTED AT THE REQUEST OF THE CONSTRUCTION INSPECTOR. IF REQUIRED, THE NUMBER OF CORES FOR THICKNESS VERIFICATION WILL BE BASED ON 3 (THREE) CORES FOR EVERY 2,000 (TWO THOUSAND) SQUARE YARDS OF PAVEMENT SURFACE AREA.

10. DURING WORK PROGRESS, THE TESTING LABORATORY WILL CAST TEST CYLINDERS TO MAINTAIN A CHECK ON COMPRESSIVE STRENGTH ON THE CONCRETE PLACED. SAMPLING AND MOLDING OF TEST SPECIMENS MUST MEET APPLICABLE ASTM TESTING GUIDELINES. CONCRETE PAVEMENT TESTING REQUIRES 3 (THREE) INDIVIDUAL STRENGTH SAMPLES PER TEST, AT A FREQUENCY OF 1 (ONE) TEST PER 100 (ONE HUNDRED) CUBIC YARDS (OR FRACTION THEREOF) OR CONCRETE PLACED PER DAY. DELIVER A COPY OF THE TEST RESULTS TO THE ENGINEERING DEPARTMENT AND THE CONSTRUCTION INSPECTOR THAT INCLUDES THE DATE, AND TIME OF SAMPLING, EXACT PLACEMENT OF CONCRETE, TRUCK TICKET NUMBER, SLUMP, AIR CONTENT, AND CONCRETE TEMPERATURE.

11. ANY DEFICIENCIES IN CONCRETE THICKNESS OR STRENGTH TO BE HANDLED IN ACCORDANCE WITH NCTCOG ITEM 303.8.

NOTE:
DETAIL SUBJECT TO CHANGE PER DIRECTION OF CITY OF LEWISVILLE ENGINEERING DIVISION.

LEWISVILLE
Deep Roots. Broad Wings. Bright Future.

Standard Details

REINFORCED CONCRETE TESTING REQUIREMENTS

Revisions:

No.	Description	Date

Engineering Department

Office No. 972–219–3490

www.cityoflewisville.com

Dated: 9–17–2022

Dated:

Sheet: 49

3:47:55 PM 10/16/2025
S:\WHOO-Tron\5482\5482-2401\400 Production\4 - Design\Plan Set\3. Roadway\Standards\City\5482-HDWY.dgn

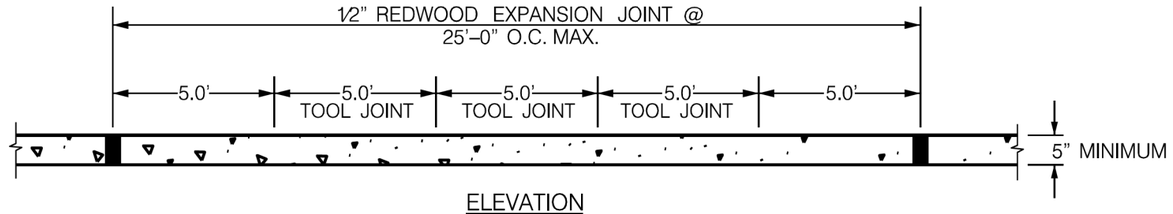

ELEVATION

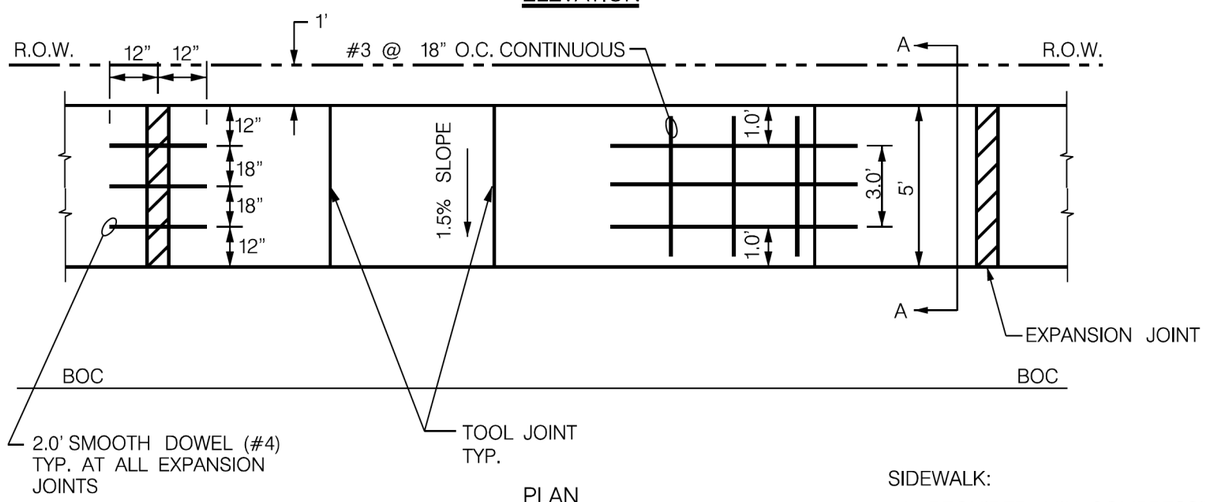

PLAN

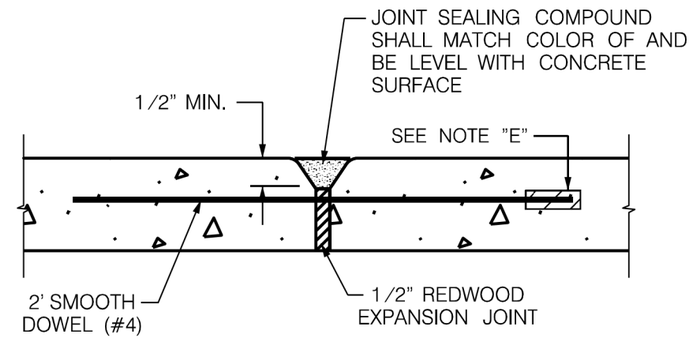

SIDEWALK EXPANSION JOINT DETAIL

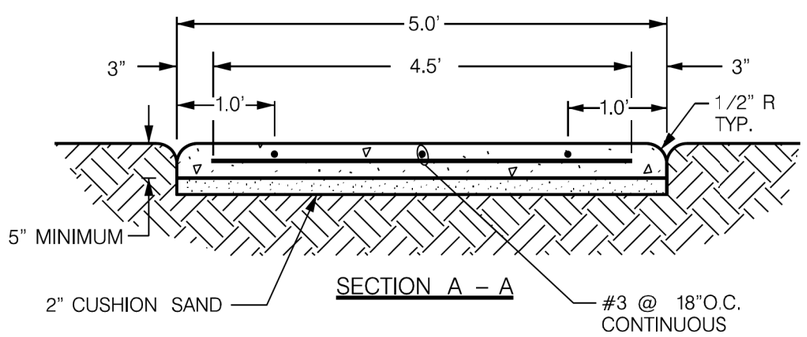

SECTION A – A

SIDEWALK:

A. REQUIRED MIN. COMPRESSIVE STRENGTH OF CONCRETE IS 3,000 PSI @ 28 DAYS.

B. CONCRETE SIDEWALK TO BE PLACED ON 2" MIN. CUSHION SAND ON SUBGRADE COMPACTED TO 95% STD. PROCTOR DENSITY.

C. SET FORMS TRUE TO LINE AND GRADE AND USE A 2" x 6" FORM BOARD OR APPROVED EQUAL.

D. SET FORMS SO CONCRETE DOES NOT FLOW UNDERNEATH THEM.

E. ASPHALT COAT OR DOWEL SLEEVE THROUGH SECOND POUR.

F. CONTRACTOR TO SAWCUT EXISTING SIDEWALK AT EXISTING TOOL JOINT

G. CONCRETE TO HAVE A LIGHT HORSEHAIR BROOM FINISH.

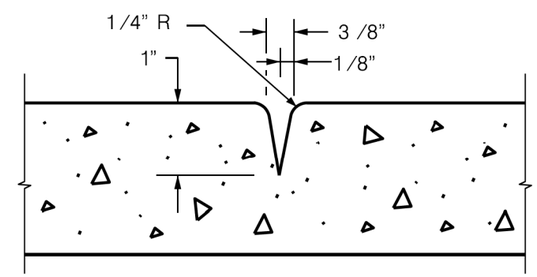

SIDEWALK TOOL JOINT DETAIL

NOTE:
DETAIL SUBJECT TO CHANGE PER DIRECTION OF CITY OF LEWISVILLE ENGINEERING DIVISION.

LEWISVILLE
Deep Roots. Broad Wings. Bright Future.

Standard Details

5.0' Sidewalk Details

Revisions:

No.	Description	Date

Engineering Department

Office No. 972-219-3490

www.cityoflewisville.com

Revised Date: 07-24-25

Sheet: 50

3:47:58 PM 10/16/2025
S:\WHOO-Fran\5482\5482-2401\400 Production\4 - Design\Plan Set\3. Roadway\Standards\City\5482+RDWY.dgn

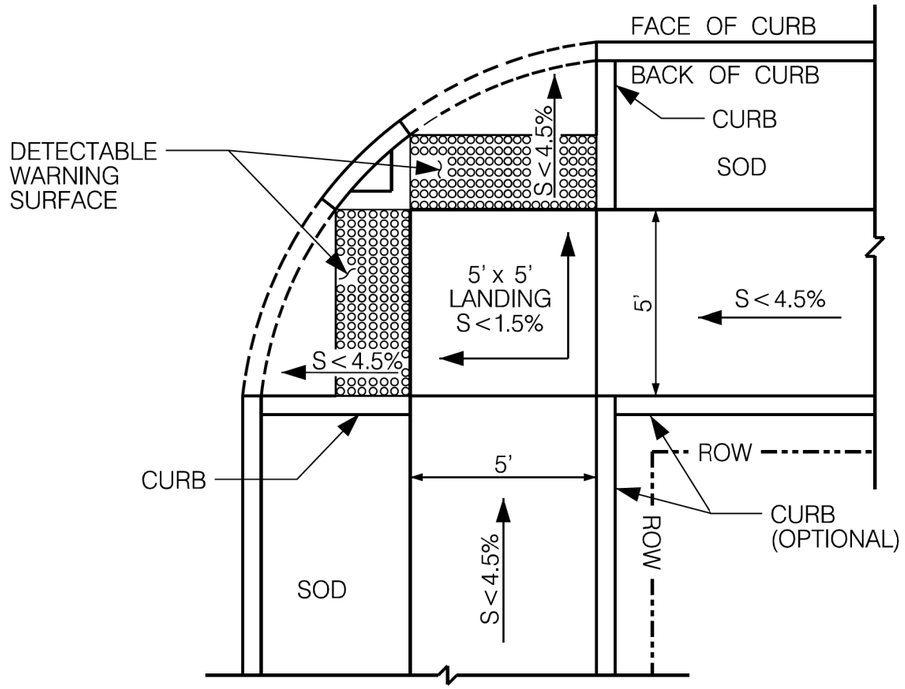

NON–WALKABLE SURFACE

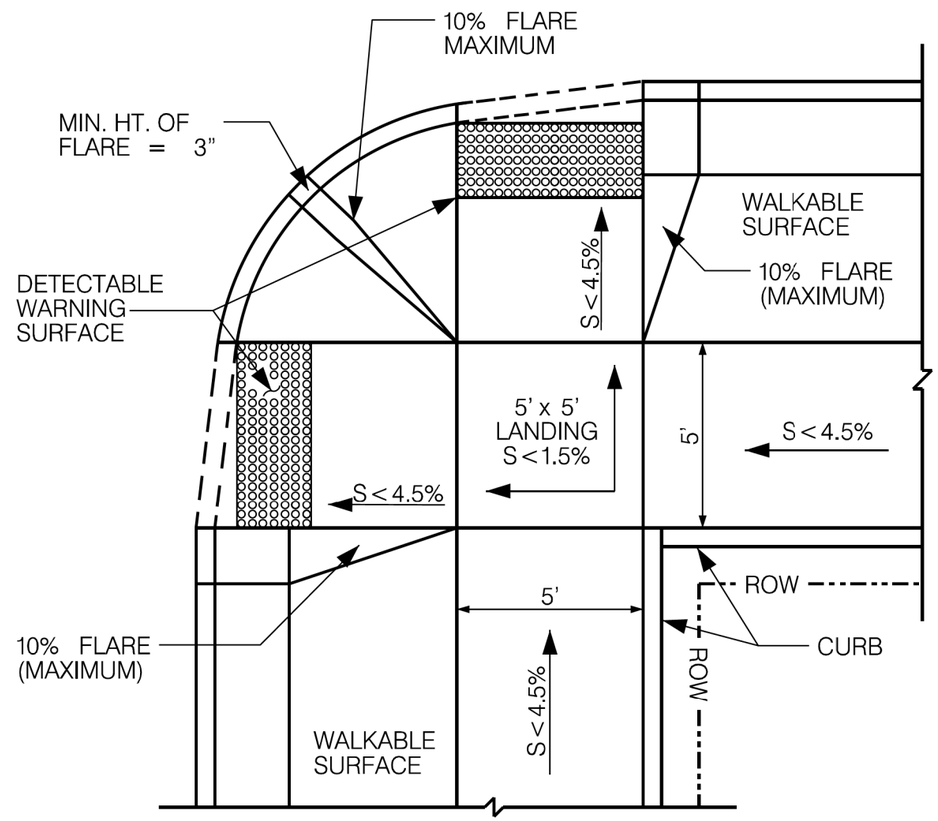

WALKABLE SURFACE

MUST BE APPROVED BY CITY ENGINEER

NOTES:

1. DETECTABLE WARNING SURFACE MUST BE SAME WIDTH AS RAMP.
2. PEDESTRIAN PATHWAY SHALL NOT EXCEED 1.5% CROSS SLOPE.
3. LANDINGS ARE NOT REQUIRED TO BE SQUARED IN SHAPE, BUT MUST HAVE A MINIMUM 4'X4' MANEUVERING SPACE.
4. GRADE BREAKS AT THE CONNECTION FROM LANDING TO ADJACENT SURFACE(S) SHALL BE PERPENDICULAR TO DIRECTION OF TRAVEL.
5. SEE DETAILS 4.13, 4.14, 4.15, AND 4.16 FOR DETECTABLE WARNING SURFACES.
6. FIELD CONDITIONS MAY VARY. CONSTRUCTION TO BE APPROVED BY CITY INSPECTOR PRIOR TO INSTALLATION IN CITY R.O.W.
7. ALL WORK MUST MEET CURRENT ADA PROWAG REQUIREMENTS.
8. CURB CANNOT SLUMP OVER DETECTABLE WARNING.

NOTE:
DETAIL SUBJECT TO CHANGE PER DIRECTION OF CITY OF LEWISVILLE ENGINEERING DIVISION.

LEWISVILLE
Deep Roots. Broad Wings. Bright Future.

Standard Details

Barrier Free Curb Ramp

Revisions:

No.	Description	Date

Engineering Department

Office No. 972–219–3490

www.cityoflewisville.com

Revised Date: 08–01–25

Sheet: 51

3:48:01 PM 10/16/2025
S:\WHOO-Fran\5482\5482-2401\400 Production\4 - Design\Plan Set\3. Roadway\Standards\City\5482+ROW.dgn

NOTES

1. **THIS DETAIL TO BE USED ONLY WITH EXPRESS PERMISSION BY CITY ENGINEER.**
2. LANDINGS ARE NOT REQUIRED TO BE SQUARE IN SHAPE, BUT MUST MEET MINIMUM ADA MANEUVERING SPACE REQUIREMENTS.
3. CONNECTION FROM LANDING TO ADJACENT SURFACE(S) MUST BE PERPENDICULAR TO DIRECTION OF TRAVEL.
4. GRADE BREAK MUST BE PERPENDICULAR TO RAMPS.
5. PEDESTRIAN PATHWAY SHALL NOT EXCEED <1.5% CROSS SLOPE

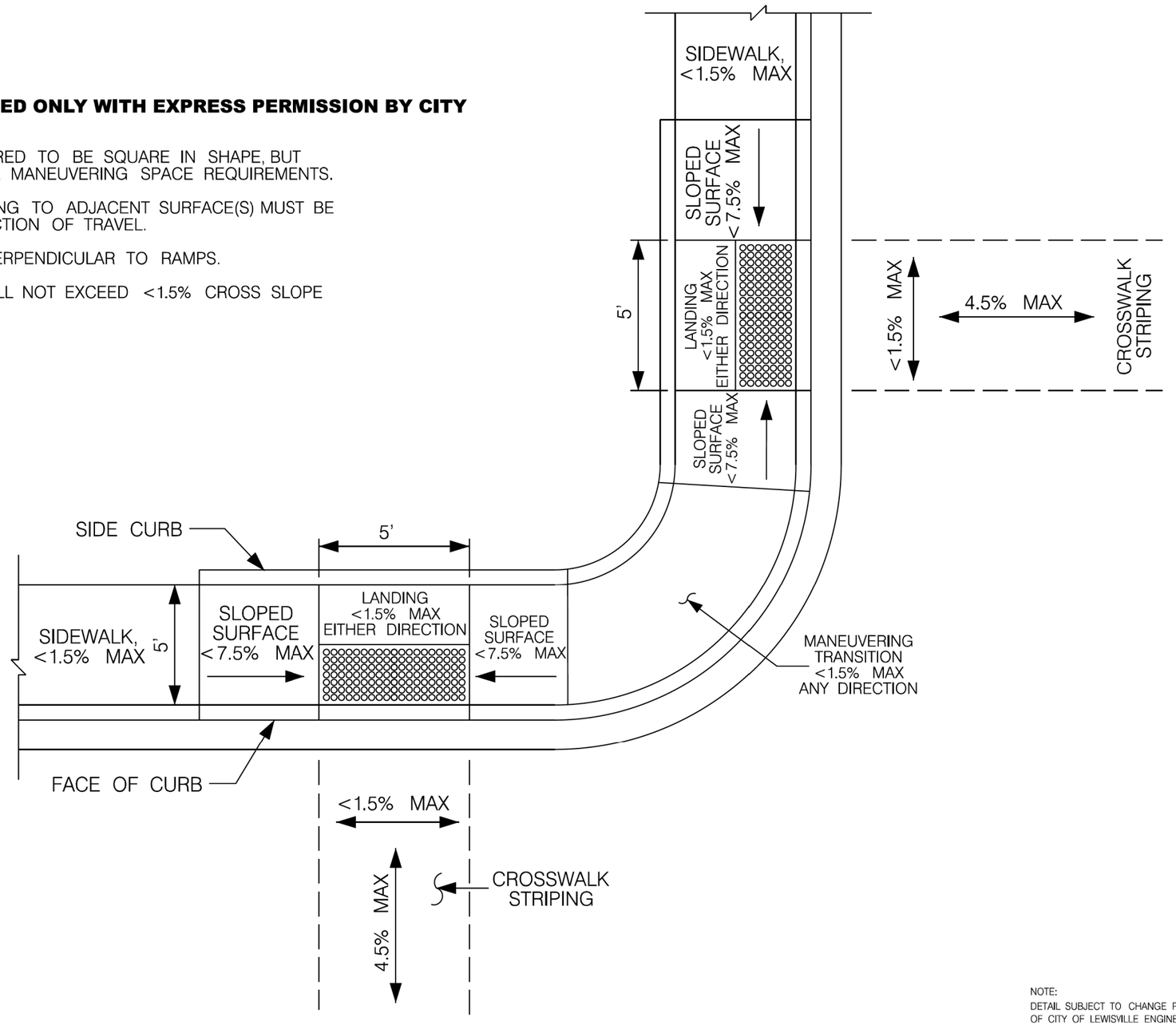

NOTE:
DETAIL SUBJECT TO CHANGE PER DIRECTION OF CITY OF LEWISVILLE ENGINEERING DIVISION.

LEWISVILLE
Deep Roots. Broad Wings. Bright Future.

Standard Details

DIRECTIONAL BARRIER FREE CURB RAMP SKEWED INTERSECTION

Revisions:

No.	Description	Date

Engineering Department

Office No. 972-219-3490

www.cityoflewisville.com

Dated: 09-09-2022

Dated:

Sheet: 52

3:48:04 PM 10/16/2025
S:\MMOD-Fran\5482-2401\400 Production\4 - Design\Plan Set\3. Roadway\Standards\City\5482-RDWY.dgn

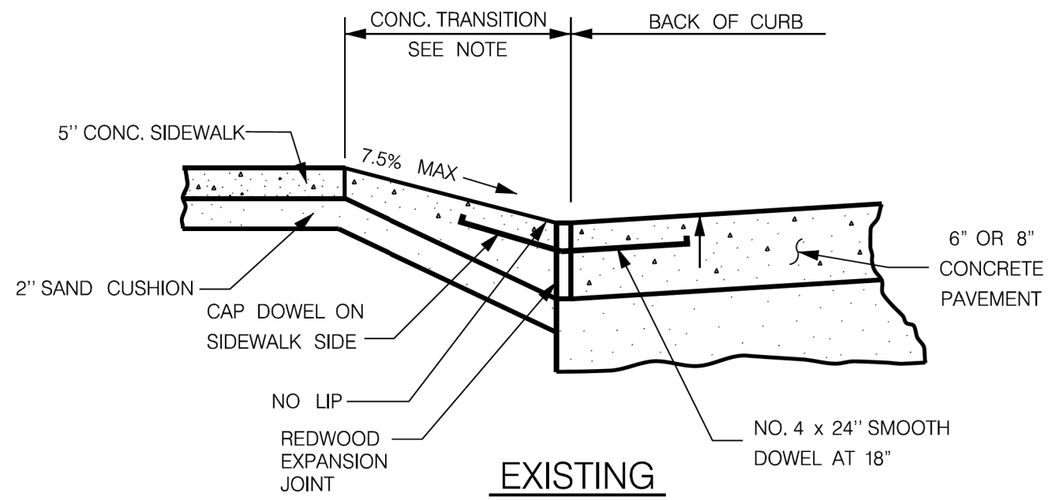

EXISTING

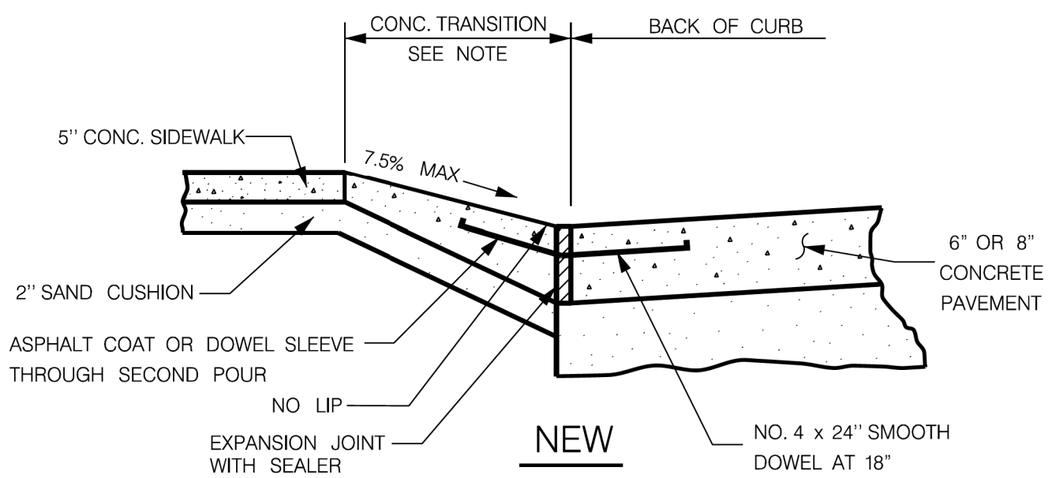

NEW

NOTE:
DETAIL SUBJECT TO CHANGE PER DIRECTION
OF CITY OF LEWISVILLE ENGINEERING DIVISION.

TRANSITION CONCRETE FROM THE THICKNESS OF THE PAVEMENT AT THE STREET TO 5" AT THE SIDEWALK.

LEWISVILLE
Deep Roots. Broad Wings. Bright Future.

Standard Details

BARRIER FREE CURB RAMP JOINT DETAIL

Revisions:

No.	Description	Date

Engineering Department

Office No. 972-219-3490

www.cityoflewisville.com

Dated: 08-17-2022

Dated:

Sheet: 53

10/16/2025 3:48:08 PM
S:\IMPO-Tran\5482\5482-2401\400 Production\4 - Design\Plan Set\3. Roadway\Standards\City\5482-HDWY.dgn

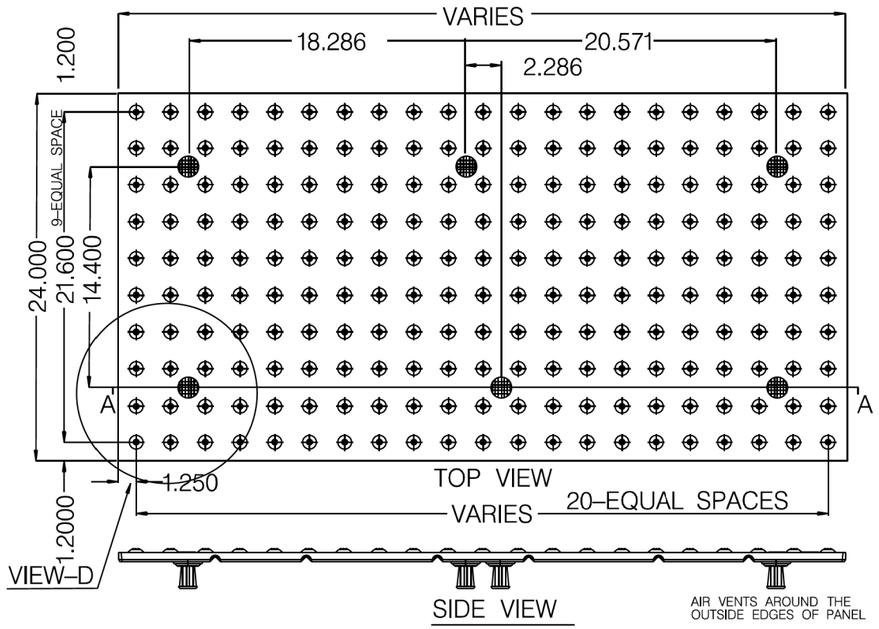

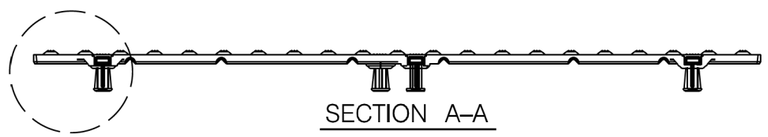

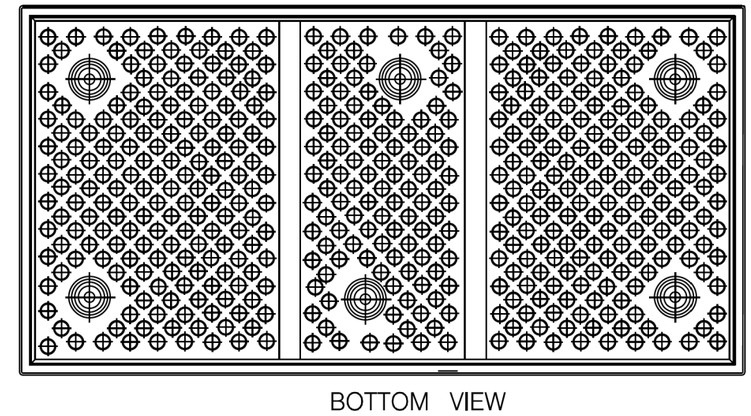

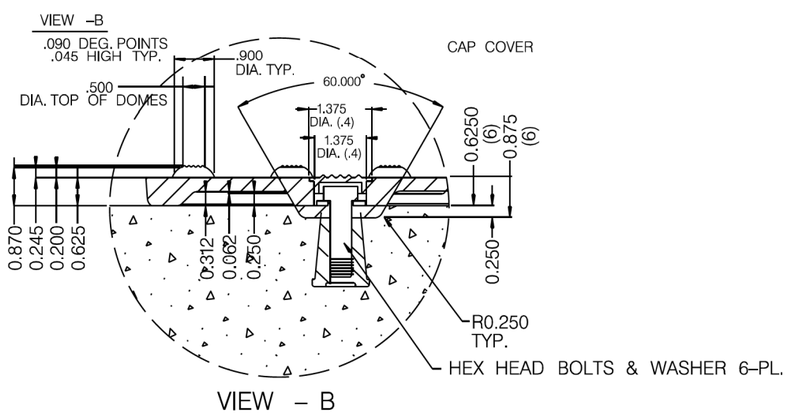

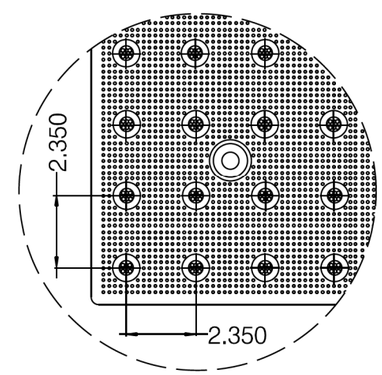

NOTES

1. BOLT ON DETECTABLE WARNING SURFACES TO BE ARMOR TILE OR APPROVED EQUAL.
2. BOLT-ON TILES TO BE USED FOR REPAIRS ONLY.
3. FOR INSTALLATION, SEE DETAIL 4.16.
4. WIDTH OF TRUNCATED DOMES TO BE MATCH WIDTH OF BARRIER FREE RAMP.

NOTE:
DETAIL SUBJECT TO CHANGE PER DIRECTION OF CITY OF LEWISVILLE ENGINEERING DIVISION.

LEWISVILLE
Deep Roots. Broad Wings. Bright Future.

Standard Details

BOLT-ON ADA REPLACEABLE TACTILE WARNING SURFACE UNITS

Revisions:

No.	Description	Date

Engineering Department

Office No. 972-219-3490

www.cityoflewisville.com

Dated: 07/12/2022

Dated:

SHEET: 54

10/16/2025 3:48:11 PM
S:\WHOLe-Tree\5482\5482-240\100 Production\4 - Design\Plan Set\3. Roadway\Standards\City\5482-RDWY.dgn

1. DURING ALL SURFACE INSTALLATION AND ALL SURFACE INSTALLATION PROCEDURES, ENSURE THAT ADEQUATE SAFETY GUIDELINES ARE IN PLACE AND THAT THEY ARE IN ACCORDANCE WITH THE APPLICABLE INDUSTRY AND GOVERNMENT STANDARDS.

2. THE APPLICATION OF ALL TILES, ADHESIVES, MECHANICAL FASTENERS, AND CAULKING TO BE IN ACCORDANCE WITH THE GUIDELINES SET BY THEIR RESPECTIVE MANUFACTURERS. DETECTABLE WARNING SURFACES NOT RECOMMENDED FOR ASPHALT APPLICATIONS.

3. COORDINATE WITH THE INSPECTOR OR ENGINEER TO ENSURE THAT THE SURFACES RECEIVING THE TILES ARE FABRICATED, PREPARED, AND CONSTRUCTED CORRECTLY AND ADEQUATELY FOR TILE INSTALLATION. REVIEW DESIGN DRAWINGS WITH THE INSPECTOR BEFORE CONSTRUCTION AND REFER ANY AND ALL DISCREPANCIES TO THE PROJECT ENGINEER.

4. SET TILE TRUE AND SQUARE TO THE CURB RAMP AREA AS DETAILED IN THE DESIGN DRAWINGS SO THAT THE LOCATION CAN BE MARKED ON THE CONCRETE SURFACE. A THIN PERMANENT MARKER WORKS WELL. REMOVE TILE WHEN DONE MARKING LOCATION.

5. MECHANICALLY CLEAN THE SURFACE RECEIVING THE TILE WITH A DIAMOND CUP GRINDER OR SHOT BLASTER TO REMOVE ANY DIRT OR FOREIGN MATERIAL. THIS CLEANING AND ROUGHENING OF THE CONCRETE SURFACE SHOULD INCLUDE AT LEAST 4 (FOUR) INCHES AROUND THE PERIMETER OF THE AREA TO RECEIVE THE TILE, AND ALSO ALONG THE CROSS PATTERN ESTABLISHED BY THE CORRESPONDING AREAS ON THE BACKSIDE OF THE TILE. THOSE SAME AREAS SHOULD THEN BE CLEANED WITH A RAG SOAKED IN ACETONE. USE PLANER ACROSS SURFACE BEFORE SETTING TILE.

6. IMMEDIATELY BEFORE INSTALLING THE DETECTABLE WARNING SURFACE, THE CONCRETE SURFACES MUST BE INSPECTED TO ENSURE THEY ARE CLEAN, DRY, FREE OF VOIDS, CURING COMPOUNDS, PROJECTIONS, LOOSE MATERIAL, DUST, OIL, GREASE, SEALERS, AND DETERMINED TO BE STRUCTURALLY SOUND AND CURED FOR A MINIMUM OF 30 (THIRTY) DAYS.

7. USING ACETONE, WIPE THE BACKSIDE OF THE TILE AROUND THE PERIMETER AND ALONG THE INTERNAL CROSS PATTERN TO REMOVE ANY DIRT OR DUST PARTICLES FROM THE AREA TO RECEIVE THE ADHESIVE.

8. APPLY TACTILE BOND & SEAL ADHESIVE TO THE BACKSIDE OF THE TILE, FOLLOWING THE PERIMETER AND INTERNAL CROSS PATTERN ESTABLISHED BY THE TILE MANUFACTURER. SUFFICIENT ADHESIVE MUST BE PLACED ON THE PRESCRIBED AREAS TO HAVE FULL COVERAGE ACROSS THE TWO–INCH WIDTH OF THE ADHESIVE LOCATOR AND SHOULD BE APPLIED TO WITHIN ¼–INCH CONTINUOUSLY AROUND THE PERIMETER EDGE OF THE TILE. THE ENTIRE TUBE OF ADHESIVE SHOULD BE APPLIED TO THE BACK OF EACH TILE, SIZES 24" x 36" AND GREATER.

9. SET THE TILE TRUE AND SQUARE TO THE CURB RAMP AREA AS DETAILED IN THE DESIGN DRAWINGS.

10. WORKING FROM THE CENTER OF THE TILE OUTWARDS, PROCEED TO DRILL AND INSTALL ALL FASTERNERS IN THE TILE'S MOLDED RECESSES.

11. STANDING WITH BOTH FEET APPLYING PRESSURE AROUND THE MOLDED RECESS PROVIDED IN THE TILE, DRILL A HOLE TRUE AND STRAIGHT TO A DEPTH OF 3½ INCHES USING A ¼–INCH DRILL BIT. DRILL THROUGH THE TILE WITHOUT HAMMER OPTION UNTIL THE TILE HAS BEEN SUCCESSFULLY PENETRATED, THEN WITH THE HAMMER OPTION, DRILL INTO THE CONCRETE. MAINTINING FOOT PRESSURE ON BOTH SIDES OF THE HOLE WHILE DRILING PREVENTS CONCRETE DUST FROM ACCUMULATING BETWEENTHE TILE AND CONCRETE WHICH CAN AFFECT THE TILE BEING INSTALLED FLUSH AND MAY COMPROMISE INSTALLATION INTEGRITY.

12. IMMEDIATELY AFTER DRILLING EACH HOLE, BEFORE MOVING ON TO THE NEXT, AND WHILE STILL APPLYING FOOT PRESSURE, MECHANICALLY FASTEN TILES TO THE CONCRETE SUBSTRATE USING A LEATHER BOUND OR HARD PLASTIC MALLET TO SET THE FASTENERS. ENSURE THE FASTENER HAS BEEN PLACED TO FULL DEPTH IN THE DOME, STRAIGHT, AND FLUSH TO THE TOP OF THE DOME. DRIVE THE PIN OF THE FASTENER WITH THE MALLET, TAKING CARE TO AVOID ANY INADVERTENT BLOWS TO THE TRUNCATED DOMES OR TILE SURFACE.

13. FOLLOWING THE INSTALLATION OF THE FASTENERS, THE CONCRETE DUST SHOULD BE VACUUMED, BRUSHED, OR BLOWN AWAY FROM THE TILE'S SURFACE AND ADJACENT CONCRETE, USING ACETONE ON A RAG, WIPE THE CONCRETE AROUND THE TILE'S PERIMETER TO ENSURE A CLEAN, DRY SURFACE TO RECEIVE PERIMETER SEALANT.

14. TACTILE BOND & SEAL PERIMETER CAULKING SEALANT SHOULD BE APPLIED FOLLOWING THE SEALANT MANUFACTURER'S RECOMMENDATIONS. TAPE ALL PERIMETER EDGES OF THE TILE BACK 1/16" FROM THE TILE'S PERITMETER EDGE AND TAPE THE ADJACENT CONCRETE BACK ½" FROM THE TILE'S PERIMETER EDGE. APPLY SEALANT AROUND THE TILE PERIMETER USING CARE TO WORK SEALANT INTO ANY VOID BETWEEN THE TILE AND CONCRETE INTERFACE. TOOL THE PERIMETER CAULKING WITH A PLASTIC APPLICATOR OR SPATULA TO CREATE A STRAIGHT EDGE IN A COVE PROFILE BETWEEN THE TILE AND ADJACENT CONRETE. REMOVE TAPE IMMEDIATELY AFTER TOOLING PERIMETER CAULKING SEALANT.

15. DO NOT ALLOW FOOT TRAFFIC ON INSTALLED TILES UNTIL THE PERIMETER CAULKING SEALANT HAS CURED SUFFICIENTLY TO AVOID TRACKING. ADHESIVE OR CAULKING ON THE SURFACE OF THE TILE WITH ACETONE.

16. IF INSTALLING ADJACENT TILES, NOTE THE ORIENTATION OF EACH TILE. CAREFUL ATTENTION WILL REVEAL THAT ONE OF THE LONG EDGES OF THE TILE IS DIFFERENT FROM THE OTHER IN REGARD TO THE TINY DOTTED TEXTURE. THERE IS ALSO A LARGER PERIMETER MARGIN BEFORE THE TINY DOTTED TEXTURE BEGINS. CONSISTENT ORIENTATION OF EACH TILE IS REQUIRED IN ORDER FOR THE TRUNCATED DOMES ON ADJACENT TILES TO LINE UP WITH EACH OTHER.

17. TO MAINTAIN PROPER SPACING BETWEEN TRUNCATED DOMES ON ADJACENT TILES, THE TAPERED EDGE SHOULD BE TRIMMED OFF USING A CONTINUOUS RIM DIAMOND BLADE IN A CIRCULAR SAW OR MINI–GRINDER. USING A STRAIGHT EDGE TO GUIDE THE CUT IS REQUIRED. ALL CUTS SHOULD BE MADE BEFORE INSTALLING THE TILES. IF INSTALLING ADJACENT TILES, TAKE CARE TO LEAVE A ⅛–INCH GAP BETWEEN EACH TILE TO ALLOW FOR EXPANSION AND CONTRACTION.

18. IF TILES ARE CUSTOM CUT TO SIZE, IF PRE–MOLDED RECESSES (TO RECEIVE FASTENERS) ARE REMOVED BY THE CUT, OR TO MAINTAIN A TIGHT INSTALLATION TO THE SUBSTRATE, THEN ANY TRUNCATED DOME MAY BE CENTER–DRILLED WITH A ¼–INCH THROUGH HOLE, AND COUNTERSUNK WITH A SUITABLE BIT, TO RECEIVE MECHANICAL FASTENERS. DO NOT COUNTERSINK TOO WIDELY OR DEEPLY. FASTENERS SHOULD BE FLUSH WITH THE TOP OF THE TUNCATED DOME WHEN COUNTERSUNK PROPERLY.

NOTE:
DETAIL SUBJECT TO CHANGE PER DIRECTION OF CITY OF LEWISVILLE ENGINEERING DIVISION.

Dated: 07/6/2022

Dated:

SHEET: 55

Engineering Department

Office No. 972-219-3490

www.cityoflewisville.com

Revisions:

No.	Description	Date

Standard Details

BOLT–ON ADA REPLACEABLE TACTILE WARNING INSTALLATION

LEWISVILLE
Deep Roots. Broad Wings. Bright Future.

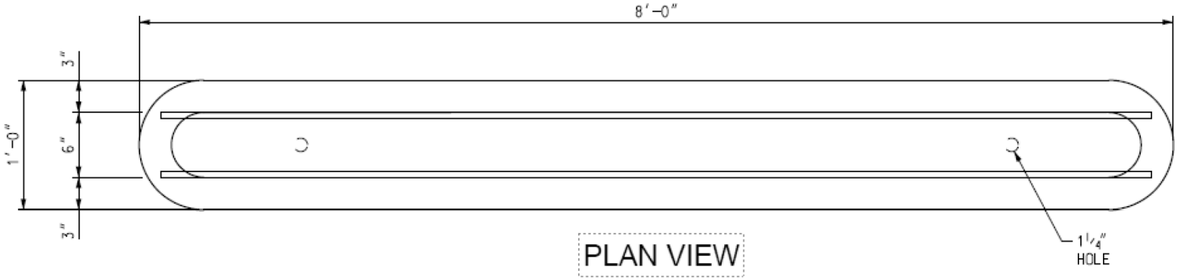

PLAN VIEW

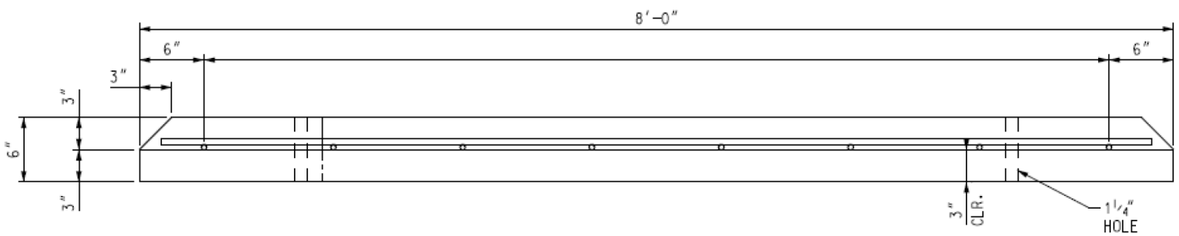

PROFILE

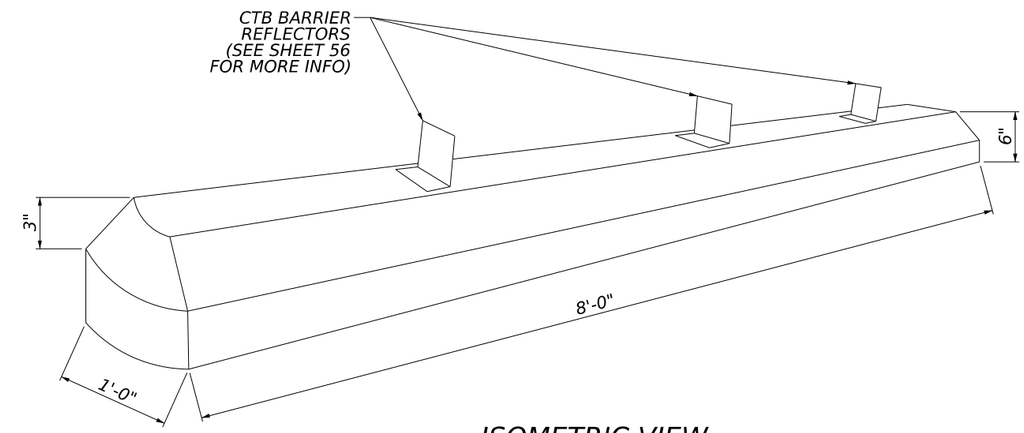

ISOMETRIC VIEW

Precast concrete protection for cycle tracks
8000 PSI compressive strength concrete
Fiber reinforcement: FiberLock TM
Steel reinforcement: Qty 2, #4 rebar
2 precast holes for installation hardware

Bike Block

LJA Engineering, Inc. LJA
FRN - F-1386

LEWISVILLE
Deep Roots. Broad Wings. Bright Future.

CITY OF LEWISVILLE

BIKE LANE BARRIER

SHEET 1 OF 1

CONT	SECT	JOB	HIGHWAY
			VARIOUS
DIST	COUNTY		SHEET NO.
	DENTON		56

3:48:20 PM 10/16/2025
S:\NHOU-Fron\5482\5482-2401\400 Production\4 - Design\Plan Set\3. Roadway\Standards\City\5482-RDWY.dgn

DISCLAIMER:
The use of this standard is governed by the "Texas Engineering Practice Act". No warranty of any kind is made by TxDOT for any purpose whatsoever. TxDOT assumes no responsibility for the conversion of this standard to other formats or for incorrect results or damages resulting from its use.

DATE: 10/16/2025 3:48:32 PM
FILE: S:\WHOU-Tran\5482\5482-2401\400 Production\4 - Design\Plan Set\8. Traffic Control\dom1-20.dgn

REFLECTOR UNIT SIZES FOR DELINEATORS AND OBJECT MARKERS

	SIZE 1	SIZE 2	SIZE 3	SIZE 4
DEVICE	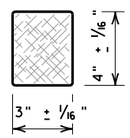	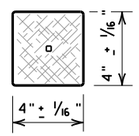	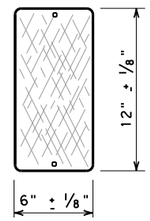	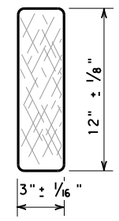
SHEETING	Yellow, White or Red Type B or C reflective sheeting			
NOTE	1. Size 1 and 4 - Direct applied reflective sheeting for use on flexible post (flx). 2. Size 2 and 3 - For use on wing channel (wc) post only. Use approved metal, plastic or fiberglass backplate with 17/64" mounting holes.			

DELINEATORS

	SINGLE		DOUBLE	
DEVICE	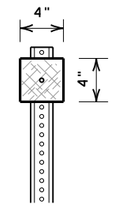	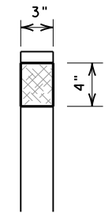	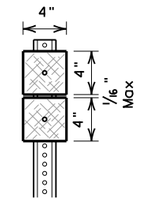	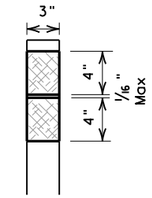
	1-Size 2 reflector unit	1-Size 1 reflector unit	2-Size 2 reflector units	2-Size 1 reflector units
SHEETING	Yellow, White or Red Type B or C Reflective Sheeting			
POST TYPE	WC	YFLX, WFLX	WC	YFLX, WFLX
MOUNT TYPE	GND	GND, SRF	GND	GND, SRF

D & OM DESCRIPTIVE CODES

INSTL DEL ASSM (D-XX)SZ X (XXXX)XXX(XX)

NUMBER OF REFLECTORS
S = Single
D = Double

COLOR OF REFLECTORS
W = White
Y = Yellow
R = Red

REFLECTOR UNIT SIZE
1 or 2

TYPE OF POST OR DELINEATOR
WC = Wing Channel Post
YFLX = Yellow Flexible Post
WFLX = White Flexible Post
BRF = Barrier Reflector

TYPE OF MOUNT
GND = Embedded (drivable or set in concrete)
CTB = Concrete Barrier Mount
GF1 or GF2 = Guard Fence Attachment
SRF = Surface Mount

DIRECTION
If Required
BI = Bi-Directional
BR = Bi-Directional with red on back

INSTL OM ASSM (OM-XX) (XXXX)XXX(XX)

TYPE OF OBJECT MARKER
1, 2, 3, or 4

NUMBER OF REFLECTORS OR DIRECTION
X = 3-Size 2 reflector units (Type 2 only)
Y = 1-Size 3 reflector unit (Type 2 only)
Z = 3-Size 1 or 1-Size 4 reflector unit(s) (Type 2 only)
L = Left Side (Type 3 Object Marker only)
R = Right Side (Type 3 Object Marker only)
C = Center (Type 3 Object Marker only)

TYPE OF POST
WC = Wing Channel Post
WFLX = White Flexible Post
TWT = Thin Walled Tubing

TYPE OF MOUNT
GND = Embedded (drivable)
SRF = Surface Mount
WAS = Wedge Anchor Steel
WAP = Wedge Anchor Plastic

DIRECTION
If Required
BI = Bi-Directional

OBJECT MARKERS

	Type 1 (OM-1)	Type 2 (OM-2)			Type 3 (OM-3)			Type 4 (OM-4)
	OM-1	OM-2X	OM-2Y	OM-2Z	OM-3L	OM-3R	OM-3C	OM-4
DEVICE	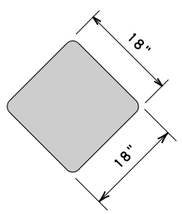	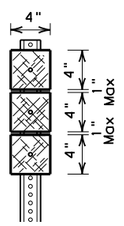	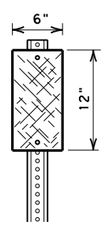	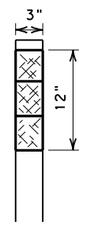	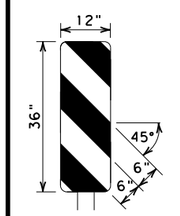	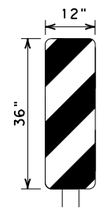	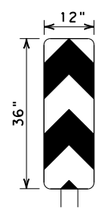	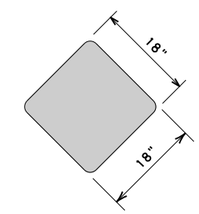
		3-Size 2 reflector units	1-Size 3 reflector unit	3-Size 1 reflector units or 1-Size 4 reflector unit				
SHEETING	Yellow-Type B_{FL} or C_{FL} Sheeting	Yellow - Type B or C Sheeting			Alternating acrylic black and retroflective yellow - Type B_{FL} or C_{FL} Sheeting			Red -Type B_{FL} or C_{FL} Sheeting
POST TYPE	TWT	WC	WC	WFLX	TWT			TWT
MOUNT TYPE	WAS, WAP	GND	GND	GND, SRF	WAS, WAP			WAS, WAP

DEPARTMENTAL MATERIAL SPECIFICATIONS

FLEXIBLE DELINEATOR & OBJECT MARKER POSTS (EMBEDDED & SURFACE MOUNT TYPES)	DMS-4400
SIGN FACE MATERIALS	DMS-8300
DELINEATORS, OBJECT MARKERS AND BARRIER REFLECTORS	DMS-8600

BARRIER REFLECTORS (BRF)

	GF1	GF2	CTB
DEVICE	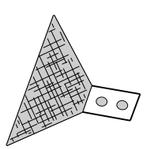		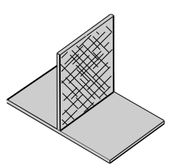
	1. Barrier reflectors shall meet the requirements of DMS 8600. 2. Approved Barrier Reflectors are listed on the "Barrier Reflectors" Material Producer List at: www.txdot.gov.		
SHEETING	Yellow, White, Red		
NOTE	1. Reflective sheeting shall have a minimum dimension of 3 inches and minimum surface area of 9 square inches.		

CHEVRONS

DEVICE	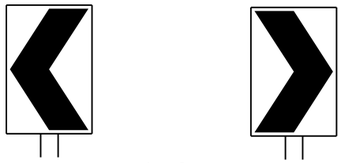 W1-8			
SIZE (W x L)	18"x 24" (Conventional)	24"x 30" (Conventional Oversize)	30"x 36" (Expressway)	36" x 48" (Freeway)
MOUNTING HEIGHT	4'-0" or 7'-0"		7'-0" Only	
NOTE	1. CHEVRON (W1-8) signs and ONE DIRECTION LARGE ARROW (W1-6) Signs shall be installed per Sign Mounting Details (SMD) Standard Sheets and paid under Item 644 (Small Roadside Sign Assemblies). 2. When there is a need to increase conspicuity, the Texas version of the ONE DIRECTION LARGE ARROW sign (W1-9T) may be used instead of the ONE DIRECTION LARGE ARROW (W1-6).			

ONE DIRECTION LARGE ARROW

DEVICE	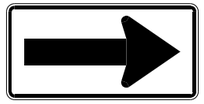 W1-6	
SIZE (W x L)	48" x 24" (Conventional)	60" x 30" (Expressway & Freeway)
MOUNTING HEIGHT	7'-0"	

NOTE:

Delineator and object marker substrates and sign substrates shall be 0.080" Aluminum sign blank to conform to ASTM B-209 Alloy 6061-T6 or approved alternative.

Texas Department of Transportation — Traffic Safety Division Standard

DELINEATOR & OBJECT MARKER MATERIAL DESCRIPTION

D & OM(1)-20

FILE: dom1-20.dgn	DN: TXDOT	CK: TXDOT	DW: TXDOT	CK: TXDOT
© TxDOT August 2004	CONT	SECT	JOB	HIGHWAY
REVISIONS				VARIOUS
10-09 3-15	DIST		COUNTY	SHEET NO.
4-10 7-20			DENTON	57

20A

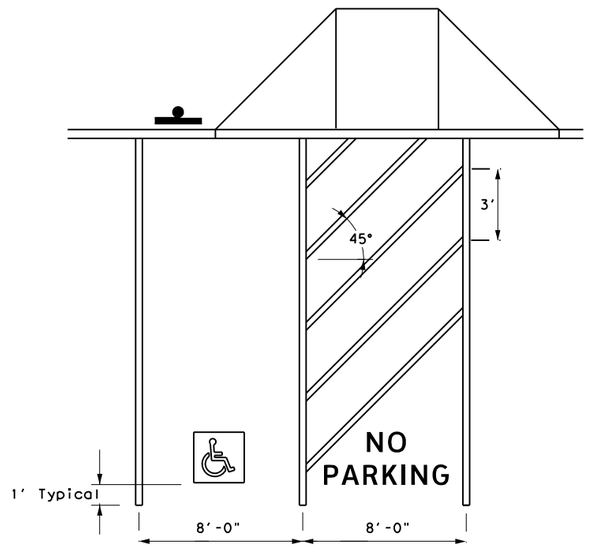

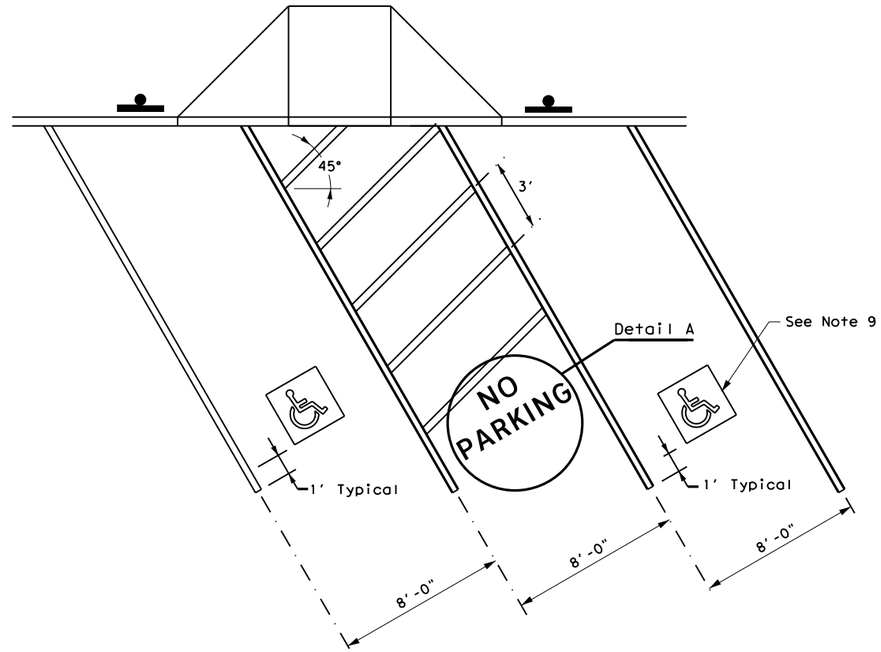

PERPENDICULAR OR ANGLED ACCESSIBLE PARKING SPACE DIMENSIONS

GENERAL NOTES:

1. All paved accessible parking space limit lines shall be 4" solid white lines.

2. Paved accessible parking spaces must include a white International Symbol of Accessibility applied conspicuously on the surface in a color that contrasts the pavement. A blue background with white border may supplement the symbol for additional contrast.

3. The words "NO PARKING" must be applied on any access aisle adjacent to the parking space. The words must be white, applied:

   a) in all capital letters.

   b) centered within each access aisle adjacent to the parking space.

4. RESERVED PARKING (R7-8T) sign including the International Symbol of Accessibility.

   a) shall be REQUIRED for each accessible parking space.

   b) shall NOT be placed between two accessible parking spaces.

   c) shall NOT be placed in a location that restricts movement of wheelchairs within the adjacent sidewalk.

   d) shall have a mounting height of 7 feet to the bottom of the sign.

5. A sign identifying the consequences of parking illegally in a paved accessible parking space. Must:

   a) at a minimum state "VIOLATORS SUBJECT TO FINE AND TOWING" (Plaque)(R7-8aPT).

   b) be mounted on a pole, post, wall or freestanding board.

   c) be no more than eight inches (8") below sign R7-8T a sign required by the Texas Accessibility Standards, 502.6.

   d) be installed so that the bottom edge of the sign is no lower than 48 inches and no higher than 80 inches above the ground level.

6. Signs identifying van parking spaces shall contain the designation "VAN ACCESSIBLE" (R7-8P) Signs shall be 60 inches minimum above the ground level measured to the bottom of the sign.

7. Perpendicular or angled parking spaces shall be 8 feet wide minimum with an access aisle 8 feet minimum wide (van accessible). Two parking spaces are permitted to share a common access aisle.

8. Access aisles shall be at street level, extend the full length of the parking space they serve, follow ADA surface requirements, and marked to discourage parking in the access aisle. Curb ramps shall connect the access aisle to the adjacent pedestrian access route. Curb ramps shall not be located within the access aisle.

9. International Symbol of Accessibility Parking Space Marking and sign details can be found in The Standard Highway Sign Designs for Texas (SHSD) at the following website. http://www.txdot.gov/

R7-8T

R7-8P

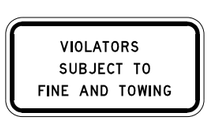

R7-8aPT

ACCESSIBLE PARKING SIGNS

Detail A

ALUMINUM SIGN BLANKS THICKNESS	
Square Feet	Minimum Thickness
Less than 7.5	0.080
7.5 to 15	0.100
Greater than 15	0.125

DEPARTMENTAL MATERIAL SPECIFICATIONS	
ALUMINUM SIGN BLANKS	DMS-7110
TRAFFIC PAINT	DMS-8200
HOT APPLIED THERMOPLASTIC	DMS-8220
PERMANENT PREFABRICATED PAVEMENT MARKINGS	DMS-8240
SIGN FACE MATERIALS	DMS-8300

Texas Department of Transportation

Traffic Safety Division Standard

PAVEMENT MARKINGS AND SIGNING FOR ACCESSIBLE PARKING

PM(AP)-21

FILE: pm(ap)-21	DN: TxDOT	CK: TxDOT	DW: TxDOT	CK: TxDOT
©TxDOT July 2021	CONT	SECT	JOB	HIGHWAY
REVISIONS				VARIOUS
	DIST	COUNTY		SHEET NO.
		DENTON		58

22F

DISCLAIMER:
The use of this standard is governed by the "Texas Engineering Practice Act". No warranty of any kind is made by TxDOT for any purpose whatsoever. TxDOT assumes no responsibility for the conversion of this standard to other formats or for incorrect results or damages resulting from its use.

DATE: 10/16/2025 3:48:35 PM
FILE: S:\WHOU-Tran\5482\5482-2401\400 Production\4 - Design\Plan Set\8. Traffic\Signs\PM(AP)-21.dgn

DISCLAIMER:
The use of this standard is governed by the "Texas Engineering Practice Act". No warranty of any kind is made by TxDOT for any purpose whatsoever. TxDOT assumes no responsibility for the conversion of this standard to other formats or for incorrect results or damages resulting from its use.

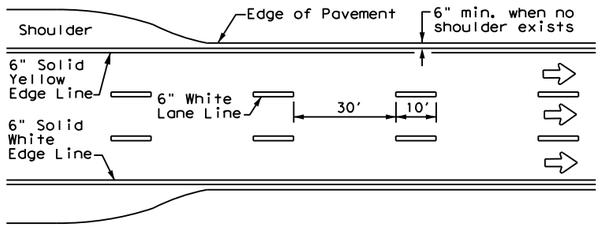

EDGE LINE AND LANE LINES ONE-WAY ROADWAY WITH OR WITHOUT SHOULDERS

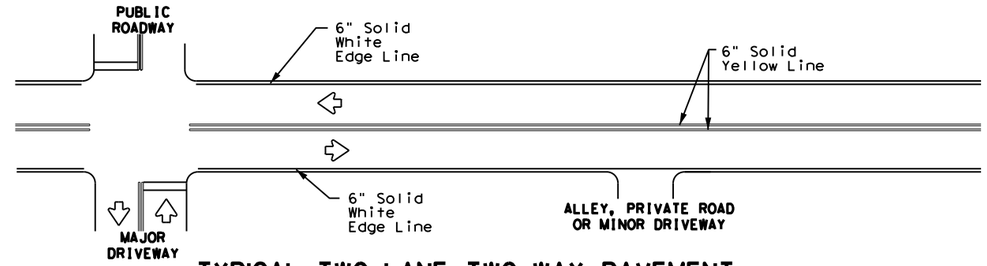

TYPICAL TWO-LANE, TWO-WAY PAVEMENT MARKINGS THROUGH INTERSECTIONS

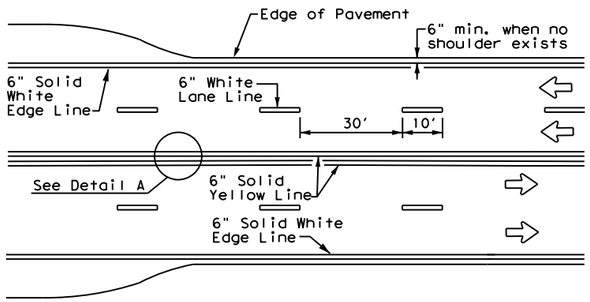

CENTERLINE AND LANE LINES FOUR LANE TWO-WAY ROADWAY WITH OR WITHOUT SHOULDERS

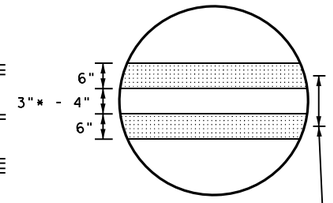

DETAIL "A"

9"** min. - 10" typ. (18" max. for traveled way greater than 48' only)

* 2" minimum for restripe projects when approved by the Engineer.

** 8" minimum for restripe projects when approved by the Engineer.

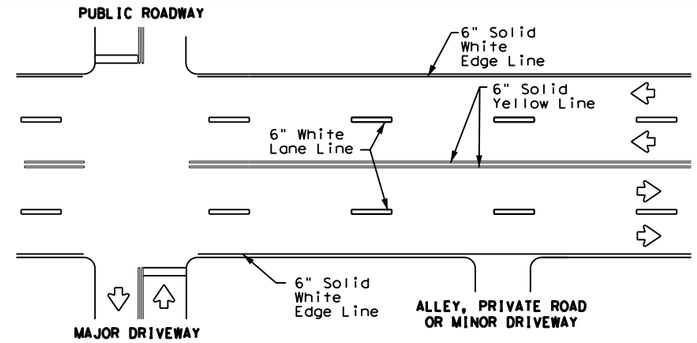

TYPICAL MULTI-LANE, TWO-WAY PAVEMENT MARKINGS THROUGH INTERSECTIONS

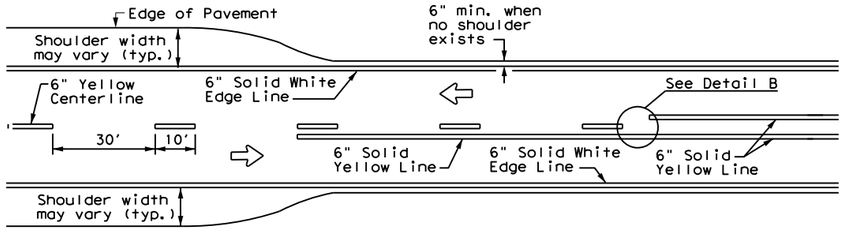

TWO LANE TWO-WAY ROADWAY WITH OR WITHOUT SHOULDERS

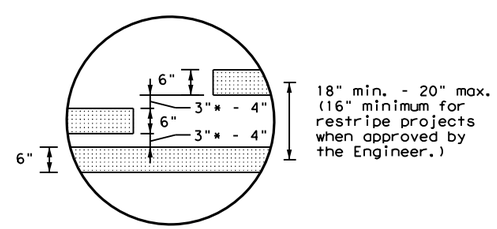

DETAIL "B"

* 2" minimum for restripe projects when approved by the Engineer.

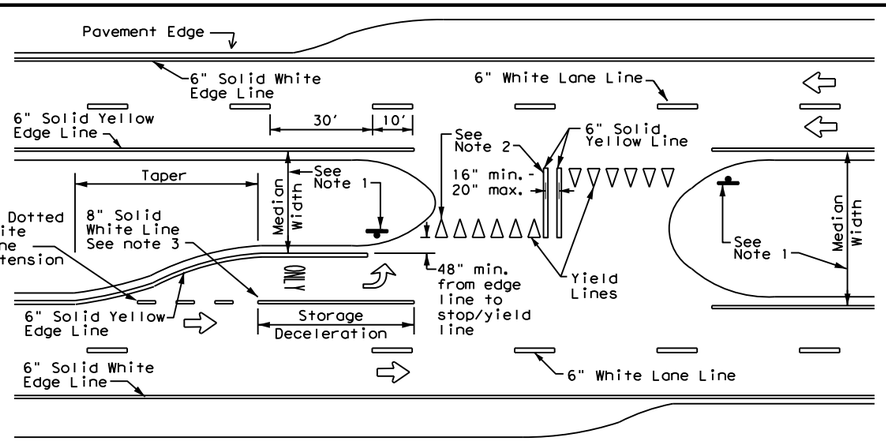

FOUR LANE DIVIDED ROADWAY CROSSOVERS

For posted speed on road being marked equal to or greater than 45 MPH.

YIELD LINES

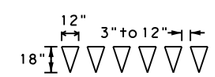

For posted speed on road being marked equal to or less than 40 MPH.

NOTES

1. Where divided highways are separated by median widths at the median opening itself of 30 feet or more, median openings shall be signed as two separate intersections.
   Each median opening has two width measurements, with one measurement for each approach. The narrow median width will be the controlling width to determine if signs are required. Yield signs are the typical intersection control. Stop signs and stop bars are optional as determined by the Engineer.
2. Install median striping (double yellow centerlines and stop lines/yield lines) when a 50' or greater median centerline can be placed. Stop lines shall only be used with stop signs. Yield lines shall only be used with yield signs.
3. Length of turn bays, including taper, deceleration, and storage lengths shall be as shown on the plans or as directed by the Engineer.

GENERAL NOTES

1. Edge line striping shall be as shown in the plans or as directed by the Engineer. The edge line should not be placed less than 6 inches from the edge of pavement. This distance may vary due to pavement raveling or other conditions. Edge lines are not required in curb and gutter sections of roadways.
2. The traveled way includes only that portion of the roadway used for vehicular travel. It does not include the parking lanes, sidewalks, berms and shoulders. The traveled ways shall be measured from the center of edge line to the center of edge line of a two lane roadway.

MATERIAL SPECIFICATIONS	
PAVEMENT MARKERS (REFLECTORIZED)	DMS-4200
EPOXY AND ADHESIVES	DMS-6100
BITUMINOUS ADHESIVE FOR PAVEMENT MARKERS	DMS-6130
TRAFFIC PAINT	DMS-8200
HOT APPLIED THERMOPLASTIC	DMS-8220
PERMANENT PREFABRICATED PAVEMENT MARKINGS	DMS-8240

All pavement marking materials shall meet the required Departmental Material Specifications as specified by the plans.

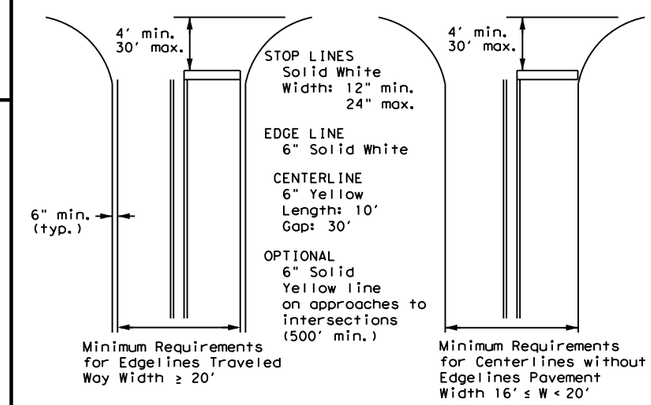

NOTE: Traveled way is exclusive of shoulder widths. Refer to General Note 2 for additional details.

GUIDE FOR PLACEMENT OF STOP LINES, EDGE LINE & CENTERLINE

Based on Traveled Way and Pavement Widths for Undivided Roadways

Texas Department of Transportation — Traffic Safety Division Standard

TYPICAL STANDARD PAVEMENT MARKINGS

PM(1)-22

FILE: pm1-22.dgn	DN:	CK:	DW:	CK:
© TxDOT December 2022	CONT	SECT	JOB	HIGHWAY
REVISIONS 11-78 8-00 6-20				VARIOUS
8-95 3-03 12-22	DIST		COUNTY	SHEET NO.
5-00 2-12			DENTON	59

22A

DATE: 10/16/2025 3:48:39 PM
FILE: S:\WHOU-Tran\5482\5482-2401\400 Production\4 - Design\Plan Set\8. Traffic\PM\pm1o22.dgn

REFLECTIVE RAISED PAVEMENT MARKERS FOR VEHICLE POSITIONING GUIDANCE

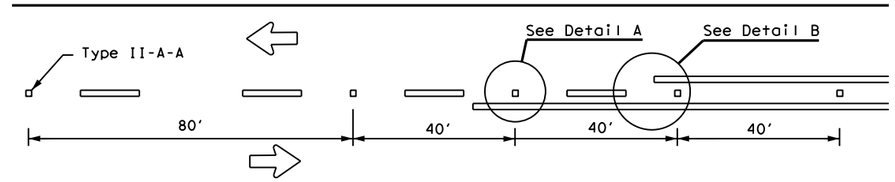

CENTERLINE FOR ALL TWO LANE TWO-WAY ROADWAYS

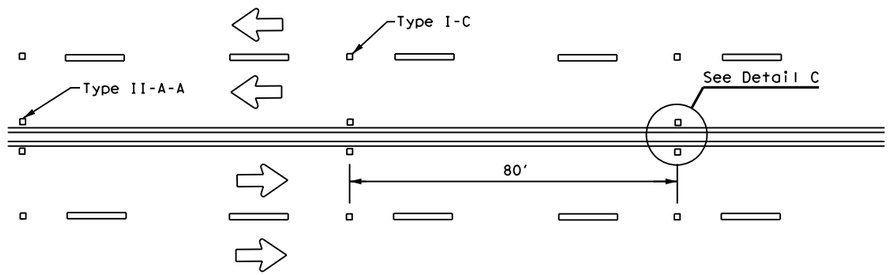

CENTERLINE & LANE LINES FOR FOUR LANE TWO-WAY ROADWAYS

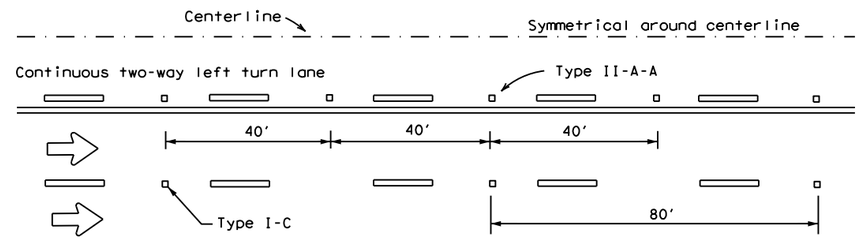

CENTERLINE AND LANE LINES FOR TWO-WAY LEFT TURN LANE

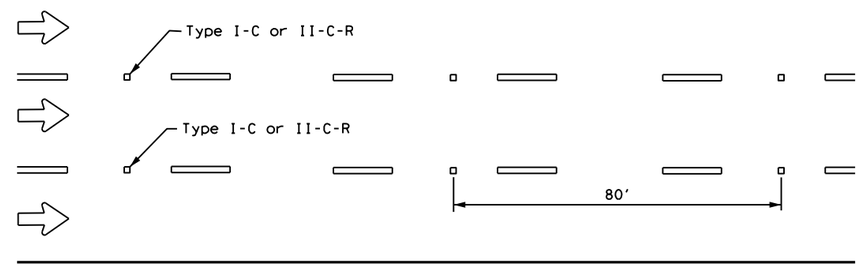

LANE LINES FOR ONE-WAY ROADWAY (NON-FREEWAY FACILITIES)

Raised pavement markers Type II-C-R shall have clear face toward normal traffic and red face toward wrong-way traffic.

See Note 3.

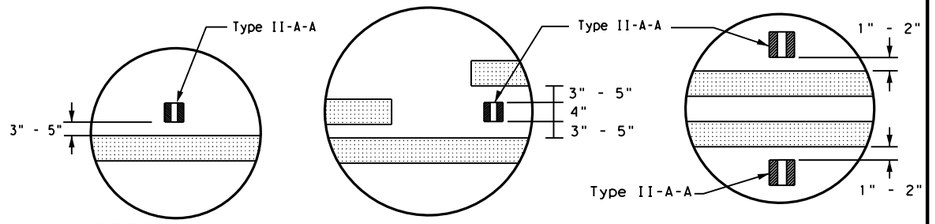

DETAIL "A" DETAIL "B" DETAIL "C"

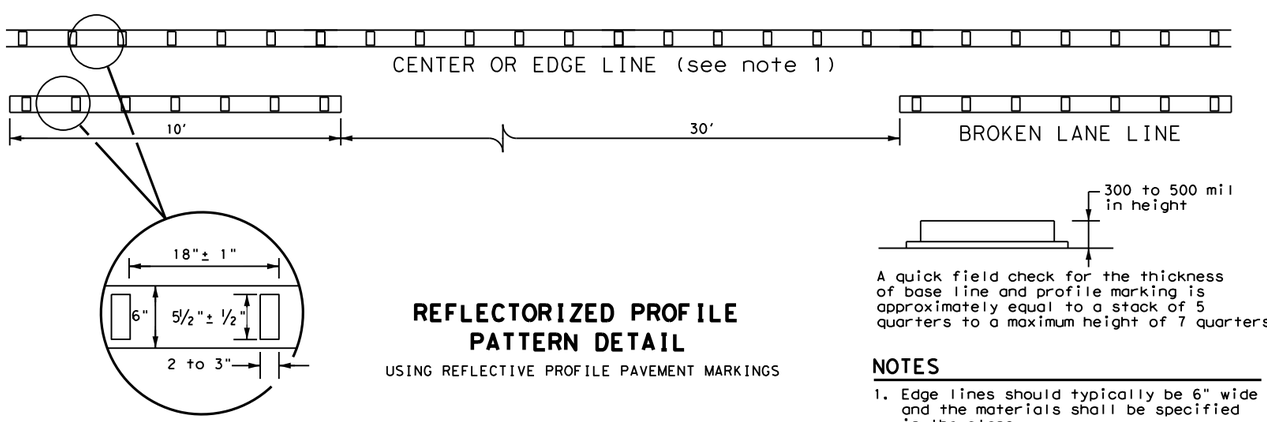

6" EDGE LINE, 6" CENTERLINE OR 6" LANE LINE

REFLECTORIZED PROFILE PATTERN DETAIL

USING REFLECTIVE PROFILE PAVEMENT MARKINGS

A quick field check for the thickness of base line and profile marking is approximately equal to a stack of 5 quarters to a maximum height of 7 quarters.

NOTES

1. Edge lines should typically be 6" wide and the materials shall be specified in the plans.
2. Profile markings shall not be placed on roadways with a posted speed limit of 45 MPH or less.

GENERAL NOTES

1. All raised pavement markers placed along broken lines shall be placed in line with and midway between the stripes.
2. On concrete pavements, the raised pavement markers should be placed to one side of the longitudinal joints.
3. Use raised pavement marker Type I-C with undivided roadways, flush medians, and two way left turn lanes. Use raised pavement marker Type II-C-R with divided highways and raised medians.

MATERIAL SPECIFICATIONS	
PAVEMENT MARKERS (REFLECTORIZED)	DMS-4200
EPOXY AND ADHESIVES	DMS-6100
BITUMINOUS ADHESIVE FOR PAVEMENT MARKERS	DMS-6130
TRAFFIC PAINT	DMS-8200
HOT APPLIED THERMOPLASTIC	DMS-8220
PERMANENT PREFABRICATED PAVEMENT MARKINGS	DMS-8240

All pavement marking materials shall meet the required Departmental Material Specifications as specified by the plans.

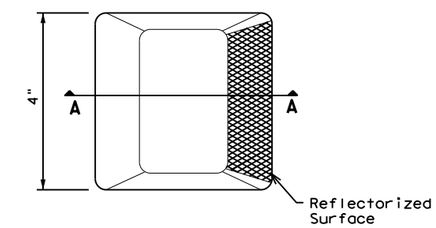

Type I (Top View)

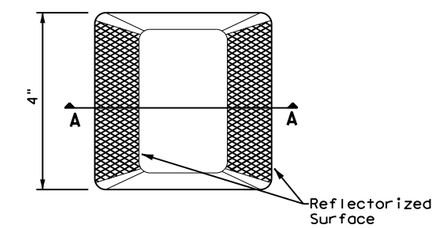

Type II (Top View)

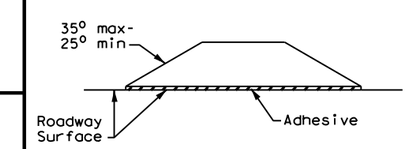

SECTION A

RAISED PAVEMENT MARKERS

Texas Department of Transportation — Traffic Safety Division Standard

POSITION GUIDANCE USING RAISED MARKERS REFLECTORIZED PROFILE MARKINGS PM(2)-22

FILE: pm2-22.dgn	DN:	CK:	DW:	CK:
©TxDOT December 2022	CONT	SECT	JOB	HIGHWAY
REVISIONS 4-77 8-00 6-20 4-92 2-10 12-22 5-00 2-12				VARIOUS
	DIST	COUNTY		SHEET NO.
		DENTON		60

22B

DISCLAIMER:
The use of this standard is governed by the "Texas Engineering Practice Act". No warranty of any kind is made by TxDOT for any purpose whatsoever. TxDOT assumes no responsibility for the conversion of this standard to other formats or for incorrect results or damages resulting from its use.

DATE: 10/16/2025 3:48:43 PM
FILE: S:\WHOU-Tran\5482\5482-2401\400 Production\4 - Design\Plan Set\8. Traffic Safety\PM\pm2-22.dgn

DISCLAIMER:
The use of this standard is governed by the "Texas Engineering Practice Act". No warranty of any kind is made by TxDOT for any purpose whatsoever. TxDOT assumes no responsibility for the conversion of this standard to other formats or for incorrect results or damages resulting from its use.

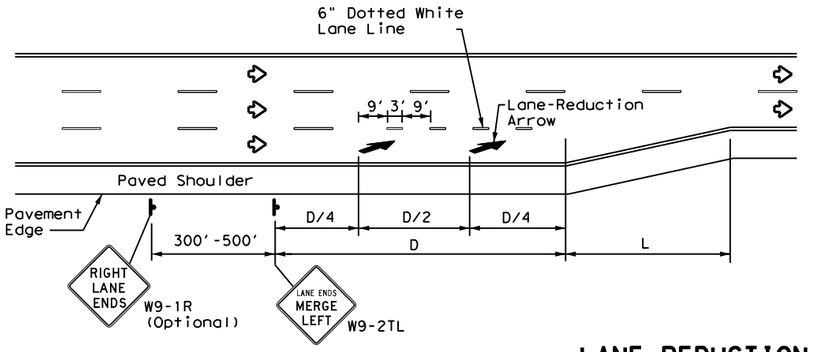

LANE REDUCTION

NOTES

1. Lane reduction pavement markings are used where the number of through lanes is reduced because of narrowing of the roadway or because of a section of on-street parking in what would otherwise be a through lane. For Texas Super 2 Passing Lanes, see TS2(PL) standard sheets.
2. On divided highways, an additional RIGHT LANE ENDS (W9-1R) sign may be installed in the median aligned with the W9-1R sign on the right side of the highway.
3. Lane reduction arrows are required for speeds of 45 mph or greater. An optional third lane reduction arrow may be added based on engineering judgement. If used, the optional third lane reduction arrow should be centered between the first and last lane reduction arrows.
4. For lane reductions on Freeways and Expressways, signing shall conform to the TxDOT Freeway Signing Handbook.

ADVANCED WARNING SIGN DISTANCE (D)		
Posted Speed	D (ft)	L (ft)
30 MPH	460	$L = \frac{WS^2}{60}$
35 MPH	565	
40 MPH	670	
45 MPH	775	L=WS
50 MPH	885	
55 MPH	990	
60 MPH	1,100	
65 MPH	1,200	
70 MPH	1,250	
75 MPH	1,350	

GENERAL NOTES

1. Lane use word and arrow markings shall be used where through lanes approaching an intersection become mandatory turn lanes. Lane use word and arrow markings should be used in auxiliary lanes of substantial length. Lane use arrow markings or word and arrow markings may be used in other lanes and turn bays for emphasis. Details for words and arrows are as shown in the Standard Highway Sign Designs for Texas.
2. When lane-use words and arrow markings are used, two sets of arrows should be used if the length of the bay is greater than 180 feet. When a single lane use arrow or word and arrow marking is used for a short turn lane, it should be located at or near the upstream end of the full-width turn lane.
3. Use raised pavement marker Type I-C with undivided highways, flush medians and two way left turn lanes. Use raised pavement marker Type II-C-R with divided highways and raised medians.
4. Length of turn bays, including taper, deceleration, and storage lengths shall be as shown on the plans or as directed by the Engineer. See Chapter 3 of the Roadway Design Manual for additional information on turning lanes or storage lengths.

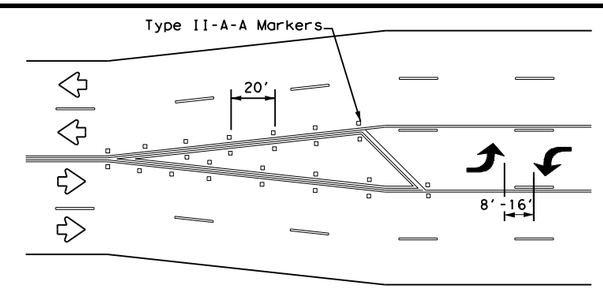

A two-way left-turn (TWLT) lane-use arrow pavement marking should be used at or just downstream from the beginning of a two-way left-turn lane within a corridor. Repeating the marking after each intersection or dedicated turn bay is not required unless stated elsewhere in the plans.

TYPICAL TRANSITION FOR TWLTL AND DIVIDED HIGHWAY

MATERIAL SPECIFICATIONS	
PAVEMENT MARKERS (REFLECTORIZED)	DMS-4200
EPOXY AND ADHESIVES	DMS-6100
BITUMINOUS ADHESIVE FOR PAVEMENT MARKERS	DMS-6130
TRAFFIC PAINT	DMS-8200
HOT APPLIED THERMOPLASTIC	DMS-8220
PERMANENT PREFABRICATED PAVEMENT MARKINGS	DMS-8240

All pavement marking materials shall meet the required Departmental Material Specifications as specified by the plans.

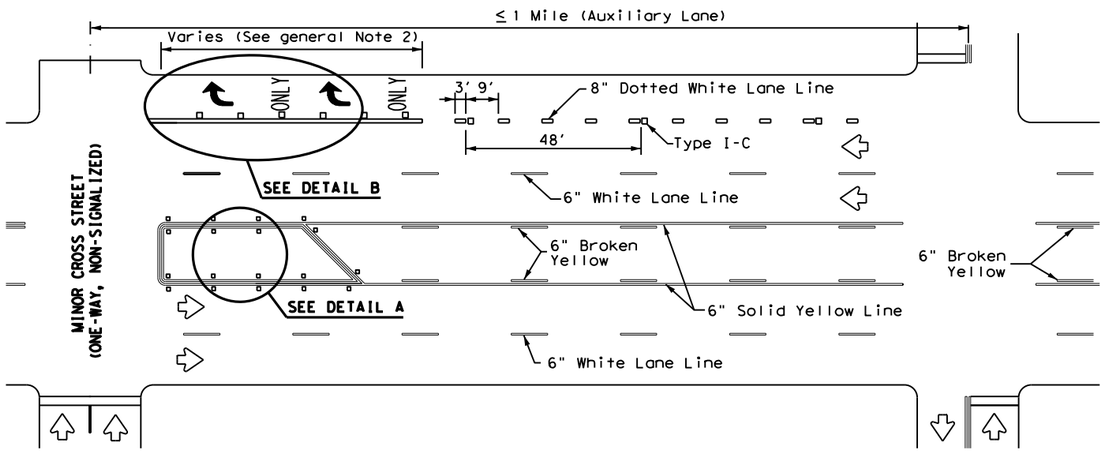

TYPICAL TWLTL AT ONE-WAY STREET AND RIGHT TURN AUXILIARY LANE

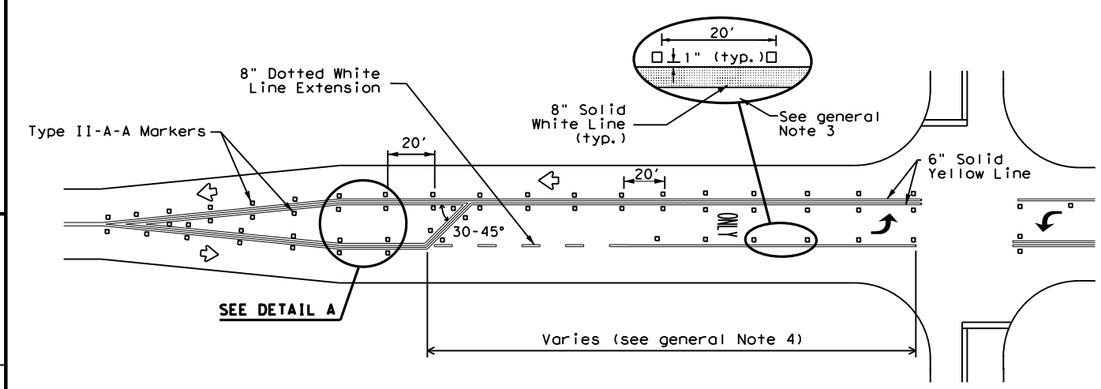

TYPICAL TWO-LANE ROADWAY INTERSECTION WITH LEFT TURN BAYS

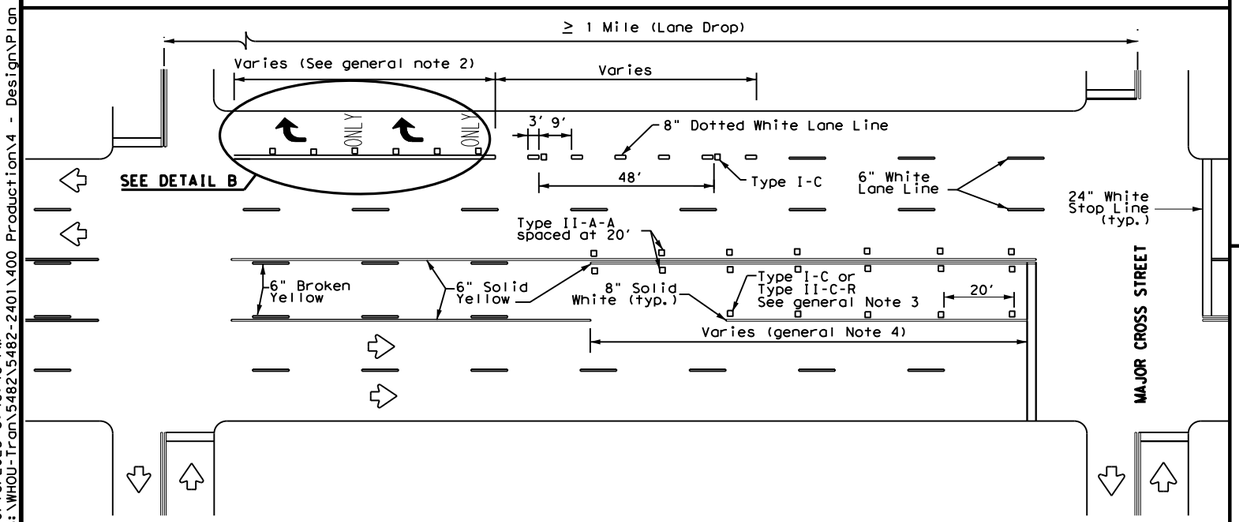

TYPICAL TWLTL AT TWO-WAY CROSS STREET AND RIGHT TURN LANE DROP

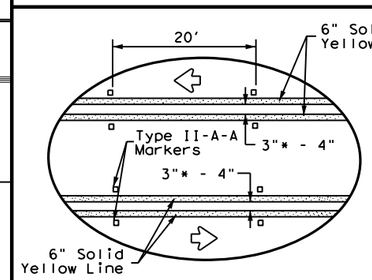

DETAIL A

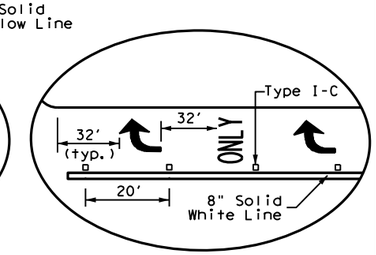

DETAIL B

* 2" minimum allowed for restripe projects when approved by the Engineer.

Texas Department of Transportation — Traffic Safety Division Standard

TWO-WAY LEFT TURN LANES, RURAL LEFT TURN BAYS, AND LANE REDUCTION PAVEMENT MARKINGS PM(3)-22

FILE: pm3-22.dgn	DN:	CK:	DW:	CK:
© TxDOT December 2022	CONT	SECT	JOB	HIGHWAY
REVISIONS 4-98 3-03 6-20 / 5-00 2-10 12-22 / 8-00 2-12				VARIOUS
	DIST		COUNTY	SHEET NO.
			DENTON	61

22C

DATE: 10/16/2025 3:48:46 PM
FILE: S:\WHOU-Tran\5482\5482-2401\400 Production\4 - Design\Plan Set\8. Traffic\TS\pm3-22.dgn

DISCLAIMER:
The use of this standard is governed by the "Texas Engineering Practice Act". No warranty of any kind is made by TxDOT for any purpose whatsoever. TxDOT assumes no responsibility for the conversion of this standard to other formats or for incorrect results or damages resulting from its use.

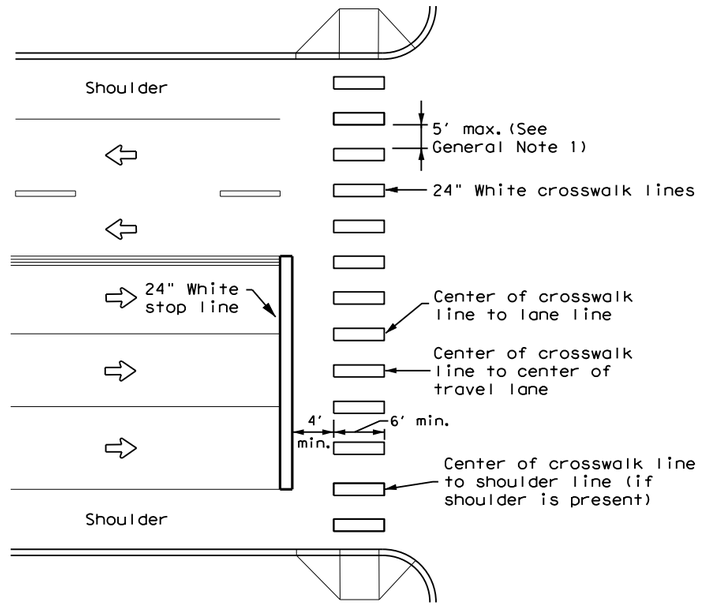

HIGH-VISIBILITY LONGITUDINAL CROSSWALK AT CONTROLLED APPROACH

GENERAL NOTES

1. Longitudinal crosswalk lines should not be placed in the wheel path of vehicles. Center the crosswalk lines on travel lanes, lane lines, and shoulder lines (if present).
2. A minimum 6" clear distance shall be provided to the curb face. If the last crosswalk line falls into this distance it must be omitted.
3. For divided roadways, adjustments in spacing of the crosswalk lines should be made in the median so that the crosswalk lines are maintained in their proper location across the travel portion of the roadway.
4. At skewed crosswalks, the crosswalk lines are to remain parallel to the lane lines.
5. Each crosswalk shall be a minimum of 6' wide.
6. The High-Visibility Longitudinal Crosswalk is the preferred crosswalk pattern on State Highways. Other crosswalk patterns as shown in the "Texas Manual on Uniform Traffic Control Devices" may be used. All crosswalk designs and dimension shall comply with the "Texas Manual on Uniform Traffic Control Devices."
7. Final placement of Stop Bar and Crosswalk shall be approved by the Engineer in the field.

MATERIAL SPECIFICATIONS	
PAVEMENT MARKERS (REFLECTORIZED)	DMS-4200
EPOXY AND ADHESIVES	DMS-6100
BITUMINOUS ADHESIVE FOR PAVEMENT MARKERS	DMS-6130
TRAFFIC PAINT	DMS-8200
HOT APPLIED THERMOPLASTIC	DMS-8220
PERMANENT PREFABRICATED PAVEMENT MARKINGS	DMS-8240

All pavement marking materials shall meet the required Departmental Material Specifications as specified by the plans.

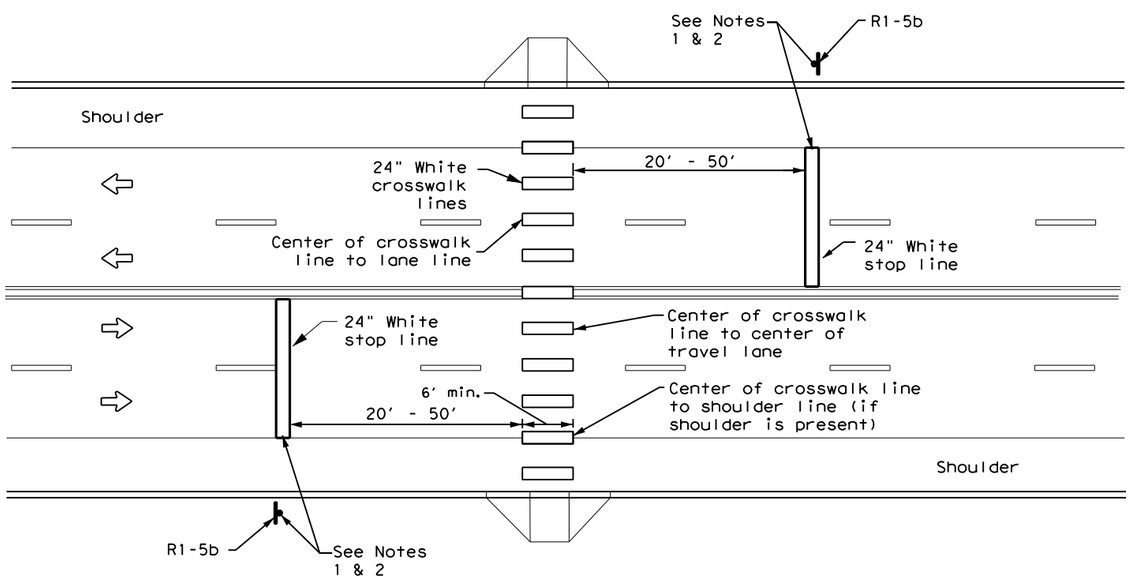

UNSIGNALIZED MIDBLOCK HIGH-VISIBILITY LONGITUDINAL CROSSWALK

NOTES:

1. Use stop bars with Stop Here For Pedestrians (R1-5b) signs at unsignalized midblock cross walks.
2. Use stop bars with STOP HERE ON RED (R10-6 or R10-6a) signs at mid block crosswalks controlled by traffic signals or pedestrian hybrid beacons.

Texas Department of Transportation

Traffic Safety Division Standard

CROSSWALK PAVEMENT MARKINGS

PM(4)-22A

FILE: pm4-22a.dgn	DN:	CK:	DW:	CK:
©TxDOT December 2022	CONT	SECT	JOB	HIGHWAY
REVISIONS				VARIOUS
6-20 6-22 12-22	DIST		COUNTY	SHEET NO.
22D			DENTON	62

DATE: 10/16/2025 3:48:50 PM
FILE: S:\WHOU-Tran\5482\5482-2401\400 Production\4 - Design\Plan Set\8. Traffic Standards\TxDOTPm4-22A3.dgn

DISCLAIMER: The use of this standard is governed by the "Texas Engineering Practice Act". No warranty of any kind is made by TxDOT for any purpose whatsoever. TxDOT assumes no responsibility for the conversion of this standard to other formats or for incorrect results or damages resulting from its use.

DATE: 10/16/2025 3:48:53 PM
FILE: S:\WHOU-Tran\5482\5482-2401\400 Production\4 - Design\Plan Set\8. Traffic\Standards\TxDOT\smdgen.dgn

SIGN SUPPORT DESCRIPTIVE CODES

(Descriptive Codes correspond to project estimate and quantities sheets)

SM RD SGN ASSM TY XXXXX(X)XX(X-XXXX)

Post Type

FRP = Fiberglass Reinforced Plastic Pipe (see SMD(FRP))
TWT = Thin-Walled Tubing (see SMD(TWT))
10BWG = 10 BWG Tubing (see SMD(SLIP-1) to (SLIP-3))
S80 = Schedule 80 Pipe (see SMD(SLIP-1) to (SLIP-3))

Number of Posts (1 or 2)

Anchor Type

UA = Universal Anchor - Concreted (see SMD(FRP) and (TWT))
UB = Universal Anchor - Bolted down (see SMD(FRP) and (TWT))
WS = Wedge Anchor Steel - (see SMD(TWT))
WP = Wedge Anchor Plastic (see SMD(TWT))
SA = Slipbase - Concreted (see SMD(SLIP-1) to (SLIP-3))
SB = Slipbase - Bolted Down (see SMD(SLIP-1) to (SLIP-3))

Sign Mounting Designation

P = Prefab. "Plain" (see SMD(SLIP-1) to (SLIP-3), (TWT), (FRP))
T = Prefab. "T" (see SMD(SLIP-1) to (SLIP-3), (TWT))
U = Prefab. "U" (see SMD(SLIP-1) to (SLIP-3))
IF REQUIRED
1EXT or 2EXT = Number of Extensions (see SMD(SLIP-1) to (SLIP-3), (TWT))
BM = Extruded Wind Beam (see SMD(SLIP-1) to (SLIP-3))
WC = 1.12 #/ft Wing Channel (see SMD(SLIP-1) to (SLIP-3))
EXAL = Extruded Aluminum Sign Panels (see SMD(SLIP-3))

REQUIRED CLEARANCE FOR BREAKAWAY SUPPORT

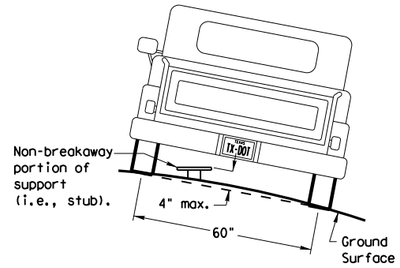

To avoid vehicle undercarriage snagging, any substantial remains of a breakaway support, when it is broken away, should not project more than 4 inches above a 60-inch chord (i.e., typical space between wheel paths).

No more than 2 sign posts should be located within a 7 ft. circle.

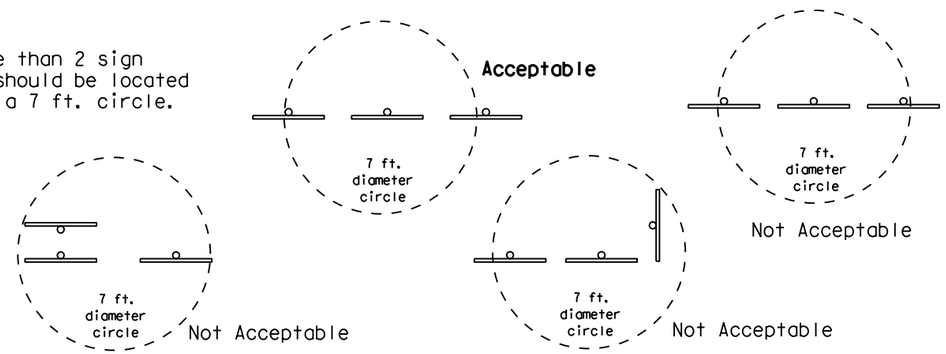

SIGN LOCATION

PAVED SHOULDERS

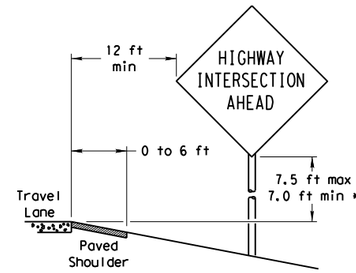

LESS THAN 6 FT. WIDE

When the shoulder is 6 ft. or less in width, the sign must be placed at least 12 ft. from the edge of the travel lane.

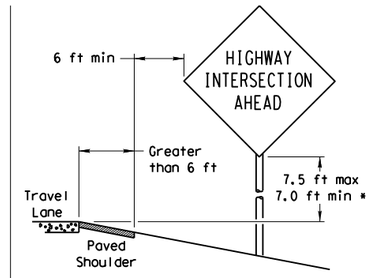

GREATER THAN 6 FT. WIDE

When the shoulder is greater than 6 ft in width, the sign must be placed at least 6 ft. from the edge of the shoulder.

T-INTERSECTION

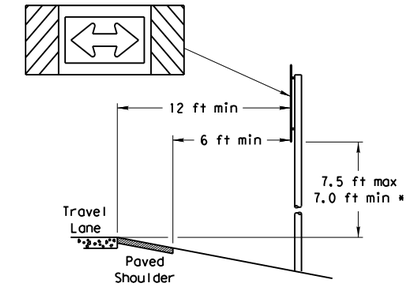

When this sign is needed at the end of a two-lane, two way roadway, the right edge of the sign should be in line with the centerline of the roadway. Place as close to ROW as practical.

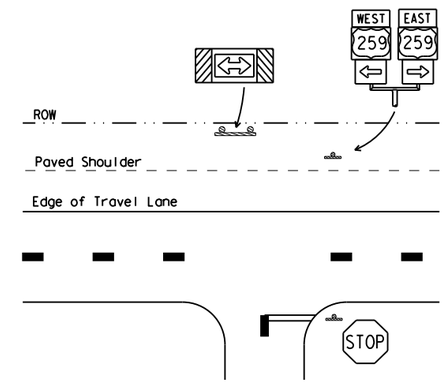

BEHIND BARRIER

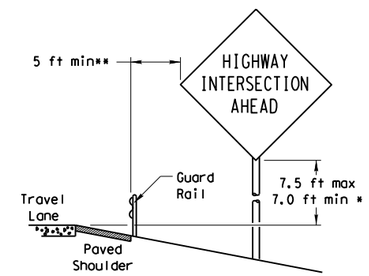

BEHIND GUARDRAIL

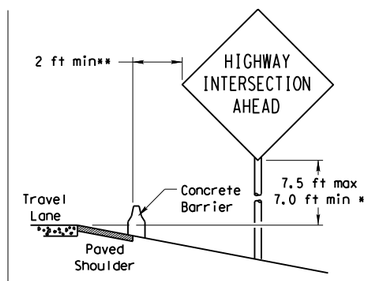

BEHIND CONCRETE BARRIER

**Sign clearance based on distance required for proper guard rail or concrete barrier performance.

* Signs shall be mounted using the following condition that results in the greatest sign elevation:

(1) a minimum of 7 to a maximum of 7.5 feet above the edge of the travel lane or

(2) a minimum of 7 to a maximum of 7.5 feet above the grade at the base of the support when sign is installed on the backslope.

The maximum values may be increased when directed by the Engineer.

See the Traffic Operations Division website for detailed drawings of sign clamps, Triangular Slipbase System components and Wedge Anchor System components.

The website address is:
http://www.txdot.gov/publications/traffic.htm

TYPICAL SIGN ATTACHMENT DETAIL

Single Signs

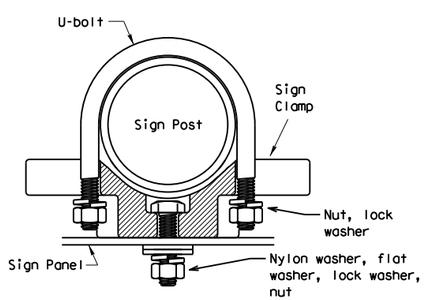

Bolts used to mount sign panels to the clamp are 5/16-18 UNC galvanized square head with nut, nylon washer, flat washer and lock washer. The bolt length is 1 inch for aluminum.

When two sign clamps are used to mount signs back-to-back, use a 5/16-18 UNC galvanized hex head per ASTM A307 with nut and helical-spring lock washer. The approximate bolt lengths for various post sizes and sign clamp types are given in the table at right. The bolt length may need to be adjusted depending upon field conditions.

Sign clamps may be either the specific size clamp or the universal clamp.

Back-to-Back Signs

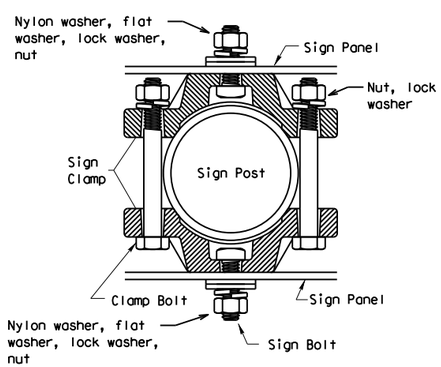

Pipe Diameter	Approximate Bolt Length	
	Specific Clamp	Universal Clamp
2" nominal	3"	3 or 3 1/2"
2 1/2" nominal	3 or 3 1/2"	3 1/2 or 4"
3" nominal	3 1/2 or 4"	4 1/2"

SIGNS WITH PLAQUES

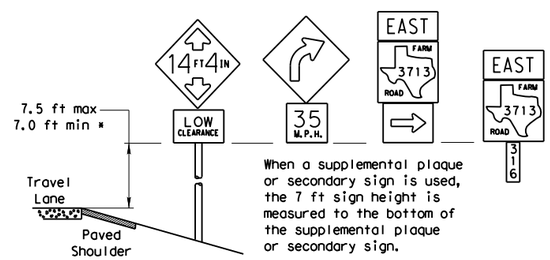

When a supplemental plaque or secondary sign is used, the 7 ft sign height is measured to the bottom of the supplemental plaque or secondary sign.

CURB & GUTTER OR RAISED ISLAND

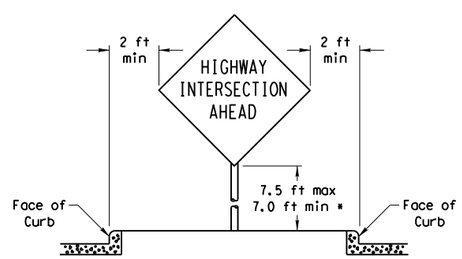

RESTRICTED RIGHT-OF-WAY

(When 6 ft min. is not possible.)

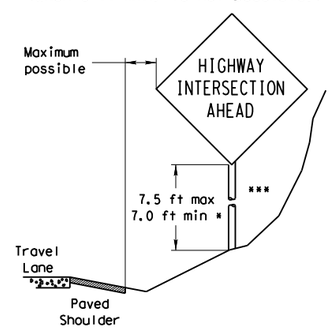

Right-of-way restrictions may be created by rocks, water, vegetation, forest, buildings, a narrow island, or other factors.

In situations where a lateral restriction prevents the minimum horizontal clearance from the edge of the travel lane, signs should be placed as far from the travel lane as practical.

*** Post may be shorter if protected by guardrail or if Engineer determines the post could not be hit due to extreme slope.

Texas Department of Transportation
Traffic Operations Division

SIGN MOUNTING DETAILS SMALL ROADSIDE SIGNS GENERAL NOTES & DETAILS

SMD(GEN)-08

©TxDOT July 2002

9-08 REVISIONS	DN: TXDOT	CK: TXDOT	DW: TXDOT	CK: TXDOT
	CONT	SECT	JOB	HIGHWAY
				VARIOUS
	DIST		COUNTY	SHEET NO.
			DENTON	63

DISCLAIMER: The use of this standard is governed by the "Texas Engineering Practice Act". No warranty of any kind is made by TxDOT for any purpose whatsoever. TxDOT assumes no responsibility for the conversion of this standard to other formats or for incorrect results or damages resulting from its use.

TRIANGULAR SLIPBASE INSTALLATION GENERAL REQUIREMENTS

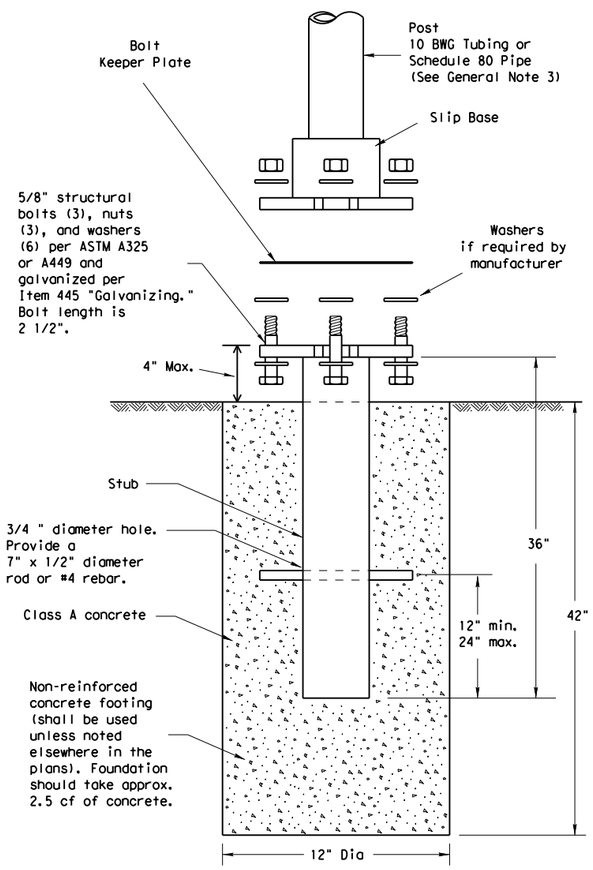

SM RD SGN ASSM TY XXXXX(X)SA(X-XXXX)

NOTE

There are various devices approved for the Triangular Slipbase System. Please reference the Material Producer List for approved slip base systems. http://www.txdot.gov/business/producer_list.htm The devices shall be installed per manufacturers' recommendations. Installation procedures shall be provided to the Engineer by Contractor.

GENERAL NOTES:

1. Slip base shall be permanently marked to indicate manufacturer. Method, design, and location of marking are subject to approval of the TxDOT Traffic Standards Engineer.
2. Material used as post with this system shall conform to the following specifications:
   10 BWG Tubing (2.875" outside diameter)
   - 0.134" nominal wall thickness
   - Seamless or electric-resistance welded steel tubing or pipe
   - Steel shall be HSLAS Gr 55 per ASTM A1011 or ASTM A1008
   - Other steels may be used if they meet the following:
     - 55,000 PSI minimum yield strength
     - 70,000 PSI minimum tensile strength
     - 20% minimum elongation in 2"
   - Wall thickness (uncoated) shall be within the range of 0.122" to 0.138"
   - Outside diameter (uncoated) shall be within the range of 2.867" to 2.883"
   - Galvanization per ASTM A123 or ASTM A653 G210. For precoated steel tubing (ASTM A653), recoat tube outside diameter weld seam by metallizing with zinc wire per ASTM B833.

   Schedule 80 Pipe (2.875" outside diameter)
   - 0.276" nominal wall thickness
   - Steel tubing per ASTM A500 Gr C
   - Other seamless or electric-resistance welded steel tubing or pipe with equivalent outside diameter and wall thickness may be used if they meet the following:
     - 46,000 PSI minimum yield strength
     - 62,000 PSI minimum tensile strength
     - 21% minimum elongation in 2"
   - Wall thickness (uncoated) shall be within the range of 0.248" to 0.304"
   - Outside diameter (uncoated) shall be within the range of 2.855" to 2.895"
   - Galvanization per ASTM A123
3. See the Traffic Operations Division website for detailed drawings of sign clamps and Texas Universal Triangular Slipbase System components. The website address is:
   http://www.txdot.gov/publications/traffic.htm
4. Sign supports shall not be spliced except where shown. Sign support posts shall not be spliced.

ASSEMBLY PROCEDURE

Foundation

1. Prepare 12-inch diameter by 42-inch deep hole. If solid rock is encountered, the depth of the foundation may be reduced such that it is embedded a minimum of 18 inches into the solid rock.
2. The Engineer may permit batches of concrete less than 2 cubic yards to be mixed with a portable, motor-driven concrete mixer. For small placements less than 0.5 cubic yards, hand mixing in a suitable container may be allowed by Engineer. Concrete shall be Class A.
3. Push the pipe end of the slip base stub into the center of the concrete. Rotate the stub back and forth while pushing it down into the concrete to assure good contact between the concrete and stub. Continue to work the stub into the concrete until it is between 2 to 4 inches above the ground.
4. Plumb the stub. Allow a minimum of 4 days to set, unless otherwise directed by the Engineer.
5. The triangular slipbase system is multidirectional and is designed to release when struck from any direction.

Support

1. Cut support so that the bottom of the sign will be 7 to 7.5 feet above the edge of the travelway (i.e., edge of the closest lane) when slip plate is below the edge of pavement or 7 to 7.5 feet above slip plate when the slip plate is above the edge of the travelway. The cut shall be plumb and straight.
2. Attach sign to support using connections shown. When multiple signs are installed on the same support, ensure the minimum clearance between each sign is maintained. See SMD(SLIP-2) for clearances based on sign types.

CONCRETE ANCHOR

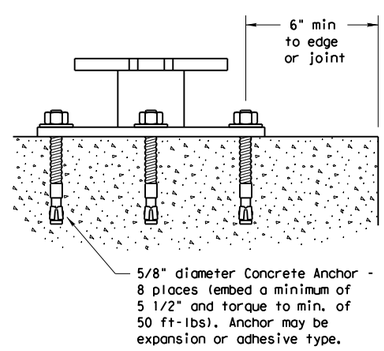

SM RD SGN ASSM TY XXXXX(X)SB(X-XXXX)

Concrete anchor consists of 5/8" diameter stud bolt with UNC series bolt threads on the upper end. Heavy hex nut per ASTM A563, and hardened washer per ASTM F436. The stud bolt shall have a minimum yield and ultimate tensile strength of 50 and 75 KSI, respectively. Nuts, bolts and washers shall be galvanized per Item 445, "Galvanizing." Adhesive type anchors shall have stud bolts installed with Type III epoxy per DMS-6100, "Epoxies and Adhesives." Adhesive anchors may be loaded after adequate epoxy cure time per the manufacturer's recommendations. Top of bolt shall extend at least flush with top of the nut when installed. The anchor, when installed in 4000 psi normal-weight concrete with a 5 1/2" minimum embedment, shall have a minimum allowable tension and shear of 3900 and 3100 psi, respectively.

Texas Department of Transportation
Traffic Operations Division

SIGN MOUNTING DETAILS
SMALL ROADSIDE SIGNS
TRIANGULAR SLIPBASE SYSTEM

SMD(SLIP-1)-08

©TxDOT July 2002	DN: TXDOT	CK: TXDOT	DW: TXDOT	CK: TXDOT
9-08 REVISIONS	CONT / SECT	JOB	HIGHWAY	
			VARIOUS	
	DIST	COUNTY		SHEET NO.
		DENTON		64

DATE: 10/16/2025 3:48:56 PM
FILE: S:\WHOU-Tran\5482\5482-2401\400 Production\4 - Design\Plan Set\8. Traffic\Standards\TxDOT\smdsi.dgn

10/16/2025 3:48:59 PM
S:\WHOU-Tran\5482\5482-2401\400 Production\4 - Design\Plan Set\8. Traffic\Standards\TxDOT's sms2s.dgn
DISCLAIMER:
The use of this standard is governed by the "Texas Engineering Practice Act". No warranty of any kind is made by TxDOT for any purpose whatsoever. TxDOT assumes no responsibility for the conversion of this standard to other formats or for incorrect results or damages resulting from its use.

DATE:
FILE:

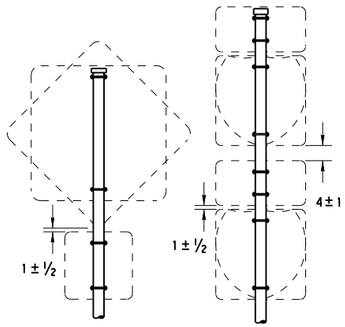

SM RD SGN ASSM TY XXXXX(1)XX(P)

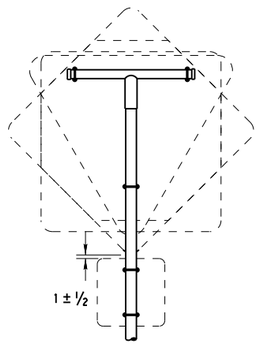

SM RD SGN ASSM TY XXXXX(1)XX(T)

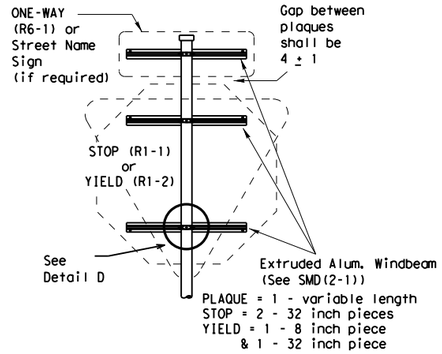

SM RD SGN ASSM TY XXXXX(1)XX(P-BM)

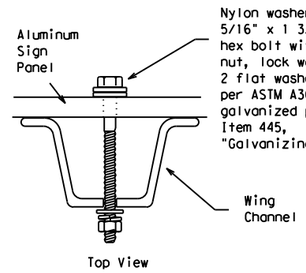

Detail A

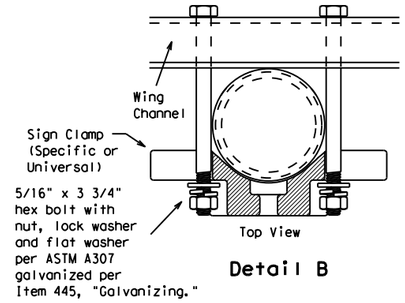

Detail B

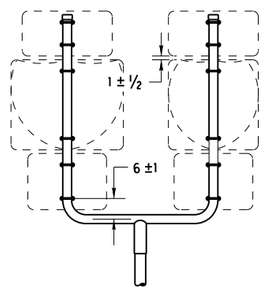

SM RD SGN ASSM TY XXXXX(1)XX(U)

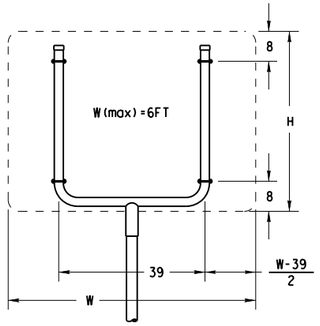

SM RD SGN ASSM TY XXXXX(1)XX(U)

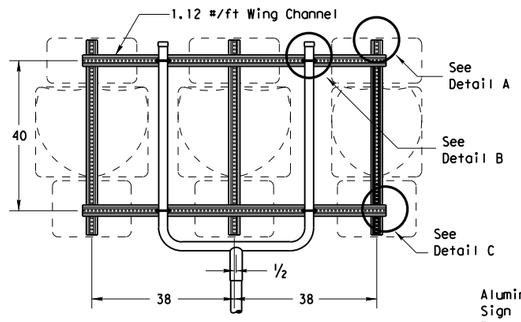

SM RD SGN ASSM TY XXXXX(1)XX(U-WC)
(See Note 11)

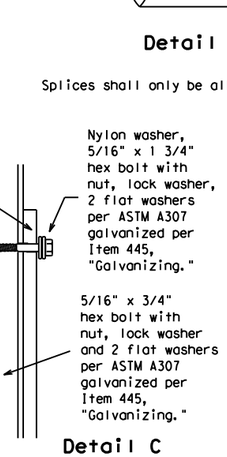

SIDE VIEW

Detail C

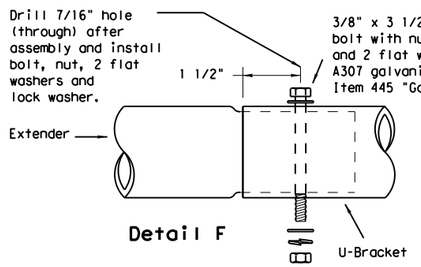

Detail F

Splices shall only be allowed behind the sign substrate.

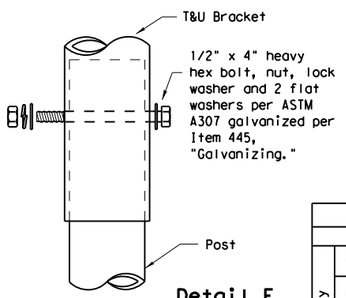

Detail E

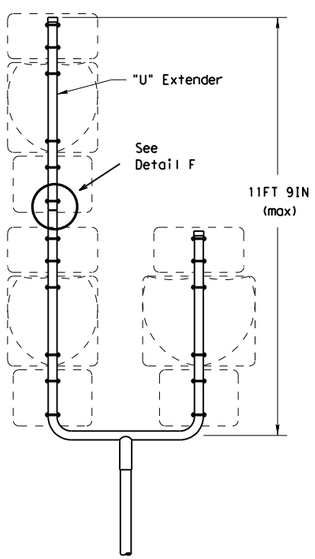

SM RD SGN ASSM TY S80(1)XX(U-1EXT)

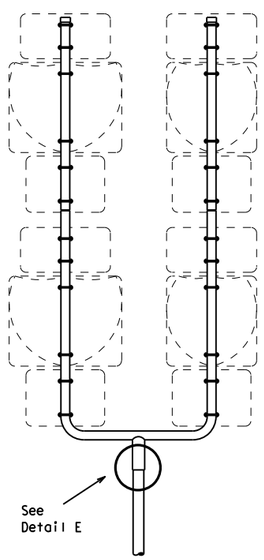

SM RD SGN ASSM TY S80(1)XX(U-2EXT)

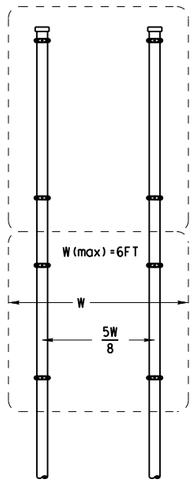

SM RD SGN ASSYM TY XXXXX(2)XX(P)

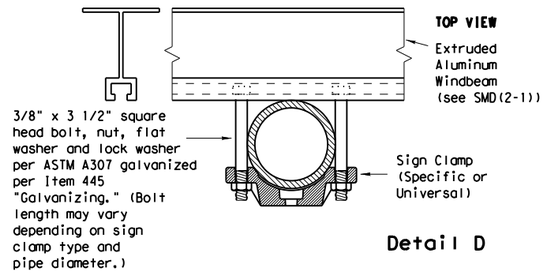

Detail D

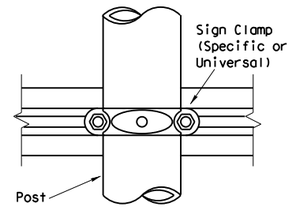

GENERAL NOTES:

1.

SIGN SUPPORT	# OF POSTS	MAX. SIGN AREA
10 BWG	1	16 SF
10 BWG	2	32 SF
Sch 80	1	32 SF
Sch 80	2	64 SF

2. The Engineer may require that a Schedule 80 post be used in place of a 10 BWG where a sign height is abnormally high due to a fill slope.
3. Sign supports shall not be spliced except where shown. Sign support posts shall not be spliced.
4. Aluminum sign blanks shall conform to Departmental Material Specifications DMS-7110 and shall have the following minimum thicknesses: 0.080 for signs less than 7.5 sq. ft., 0.100 for signs 7.5 to 15 sq. ft., and 0.125 for signs greater than 15 sq. ft.
5. Signs that require specific supports due to reasons in addition to windloading are indicated on the "REQUIRED SUPPORT" table on this sheet.
6. For horizontal rectangular signs fabricated from flat aluminum, T-brackets are used for signs 24 inches or less in height. U-brackets are used for signs of greater height.
7. When two triangular slipbase supports are used to support a single sign, they shall not be "rigidly" connected to each other except through the sign panel. This will allow each support to act independently when impacted by an errant vehicle.
8. Wing channel shall meet ASTM A 1011 SS Gr 50 and be galvanized per ASTM A 123.
9. Excess pipe, wing channel, or windbeam shall be cut off so that it does not extend beyond the sign panel (i.e., excess support shall not be visible when the sign is viewed from the front.) Repair galvanized coating at cut support ends per Item 445, "Galvanizing."
10. Additional route markers may be added vertically, provided the total sign area does not exceed the maximum allowable amount per Note 1.
11. Additional sign clamp required on the "T-bracket" post for 24 inch height signs. Place the clamp 3 inches above bottom of sign when possible.
12. Post open ends shall be fitted with Friction Caps.
13. Sign blanks shall be the sizes and shapes shown on the plans.

REQUIRED SUPPORT

	SIGN DESCRIPTION	SUPPORT
Regulatory	48-inch STOP sign (R1-1)	TY 10BWG(1)XX(T) TY 10BWG(1)XX(P-BM)
Regulatory	60-inch YIELD sign (R1-2)	TY 10BWG(1)XX(T) TY 10BWG(1)XX(P-BM)
Regulatory	48x16-inch ONE-WAY sign (R6-1)	TY 10BWG(1)XX(T) TY 10BWG(1)XX(P-BM)
Regulatory	36x48, 48x36, and 48x48-inch signs	TY 10BWG(1)XX(T)
Regulatory	48x60-inch signs	TY S80(1)XX(T)
Warning	48x48-inch signs (diamond or square)	TY 10BWG(1)XX(T)
Warning	48x60-inch signs	TY S80(1)XX(T)
Warning	48-inch Advance School X-ing sign (S1-1)	TY 10BWG(1)XX(T)
Warning	48-inch School X-ing sign (S2-1)	TY 10BWG(1)XX(T)
Warning	Large Arrow sign (W1-6 & W1-7)	TY 10BWG(1)XX(T)

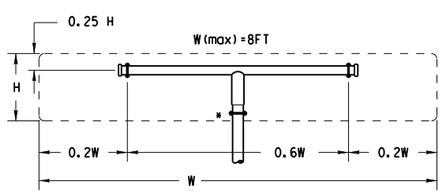

All dimensions are in english unless detailed otherwise.

SM RD SGN ASSM TY XXXXX(1)XX(T)
(* - See Note 12)

FRICTION CAP DETAIL

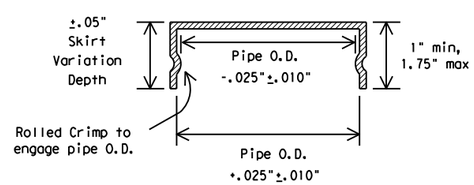

Friction caps may be manufactured from hot rolled or cold rolled steel sheets. The minimum sheet metal thickness shall be 24 gauge for all cap sizes.

The rim edges shall be reasonably straight and smooth. Caps shall be sized and formed in such a manner as to produce a drive-on friction fit and have no tendency to rock when seated on the pipe. The depth shall be sufficient to give positive protection against entrance of rainwater. They shall be free of sharp creases or indentations and show no evidence of metal fracture.

Caps shall have an electrodeposited coating of zinc in accordance with the requirements of ASTM B633 Class FE/ZN 8.

Texas Department of Transportation
Traffic Operations Division

SIGN MOUNTING DETAILS
SMALL ROADSIDE SIGNS
TRIANGULAR SLIPBASE SYSTEM

SMD(SLIP-2)-08

©TxDOT July 2002

DN: TXDOT	CK: TXDOT	DW: TXDOT	CK: TXDOT
CONT	SECT	JOB	HIGHWAY
			VARIOUS
DIST	COUNTY		SHEET NO.
	DENTON		65

9-08 REVISIONS

26C

DISCLAIMER: The use of this standard is governed by the "Texas Engineering Practice Act". No warranty of any kind is made by TxDOT for any purpose whatsoever. TxDOT assumes no responsibility for the conversion of this standard to other formats or for incorrect results or damages resulting from its use.

DATE: 10/16/2025 3:49:02 PM
FILE: S:\WHOU-Tran\5482\5482-2401\400 Production\4 - Design\Plan Set\8. Traffic\Standards\TxDOT\smds3.dgn

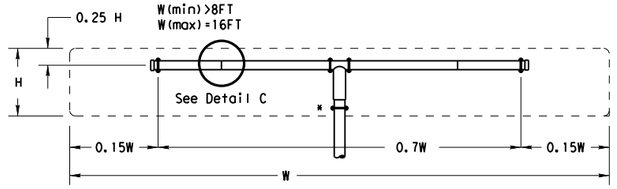

SM RD SGN ASSM TY XXXXX(1)XX(T-2EXT)
(* - See Note 12)

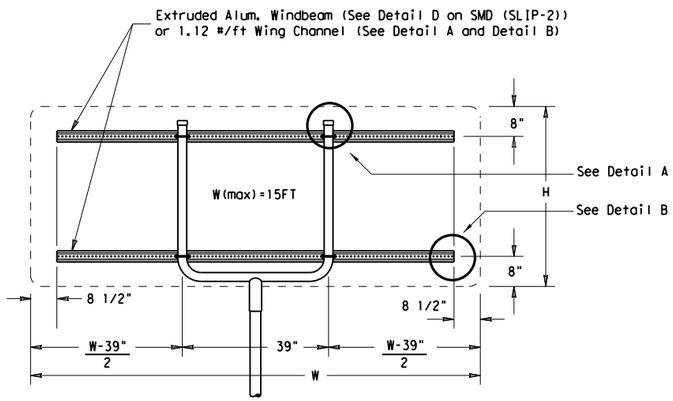

SM RD SGN ASSM TY XXXXX(1)XX(U-XX)

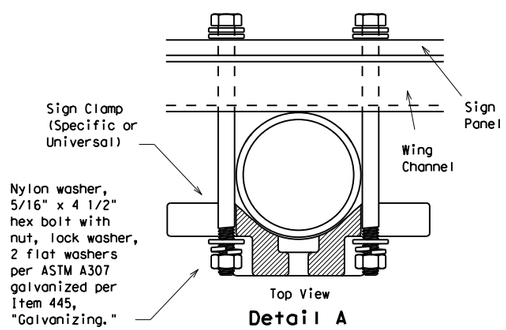

Detail A

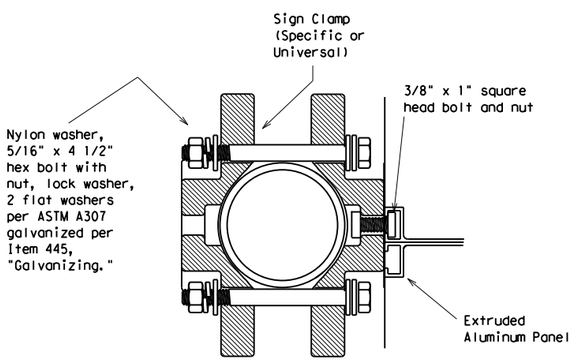

Detail D
EXTRUDED ALUMINUM SIGN WITH T BRACKET

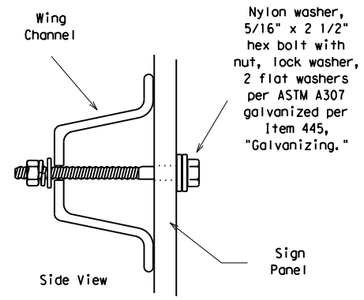

Detail B

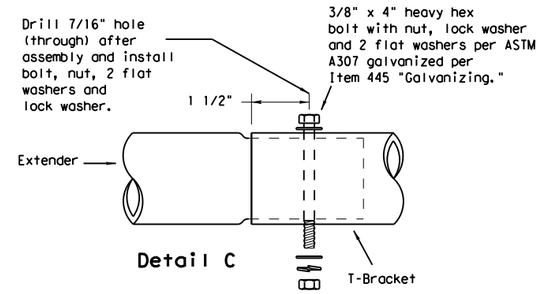

Detail C

Splices shall only be allowed behind the sign substrate.

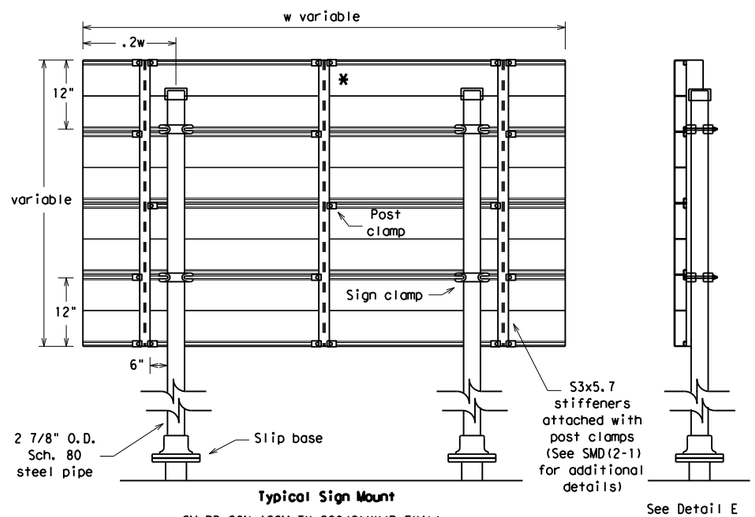

Typical Sign Mount

SM RD SGN ASSM TY S80(2)XX(P-EXAL)

* Additional stiffener placed at approximate center of signs when sign width is greater than 10'.

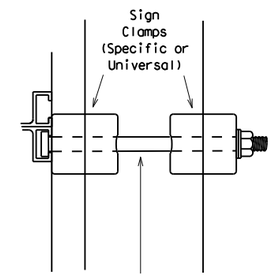

Detail E

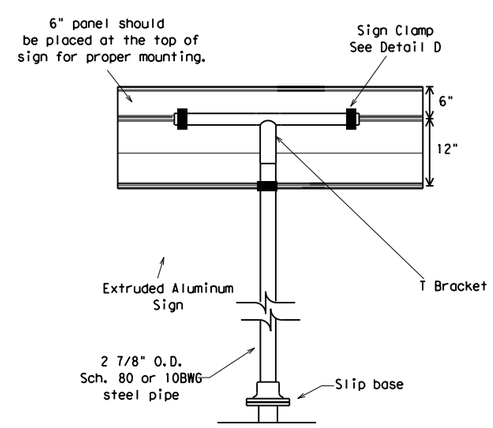

Extruded Aluminum Sign
With T Bracket

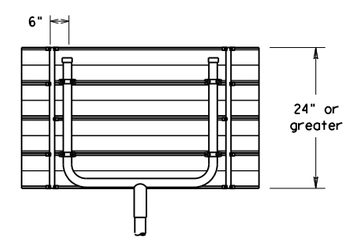

Use Extruded Alum. Windbeam as stiffeners
See SMD (2-1) for additional details

See Detail E
for clamp installation

GENERAL NOTES:

1.

SIGN SUPPORT	# OF POSTS	MAX. SIGN AREA
10 BWG	1	16 SF
10 BWG	2	32 SF
Sch 80	1	32 SF
Sch 80	2	64 SF

2. The Engineer may require that a Schedule 80 post be used in place of a 10 BWG where a sign height is abnormally high due to a fill slope.
3. Sign supports shall not be spliced except where shown. Sign support posts shall not be spliced.
4. Aluminum sign blanks shall conform to Departmental Material Specifications DMS-7110 and shall have the following minimum thicknesses: 0.080 for signs less than 7.5 sq. ft., 0.100 for signs 7.5 to 15 sq. ft., and 0.125 for signs greater than 15 sq. ft.
5. Signs that require specific supports due to reasons in addition to windloading are indicated on the "REQUIRED SUPPORT" table on this sheet.
6. For horizontal rectangular signs fabricated from flat aluminum, T-brackets are used for signs 24 inches or less in height. U-brackets are used for signs of greater height.
7. When two triangular slipbase supports are used to support a single sign, they shall not be "rigidly" connected to each other except through the sign panel. This will allow each support to act independently when impacted by an errant vehicle.
8. Wing channel shall meet ASTM A 1011 SS Gr 50 and be galvanized per ASTM A 123.
9. Excess pipe, wing channel, or windbeam shall be cut off so that it does not extend beyond the sign panel (i.e., excess support shall not be visible when the sign is viewed from the front.) Repair galvanized coating at cut support ends per Item 445, "Galvanizing."
10. Sign blanks shall be the sizes and shapes shown on the plans.
11. Additional sign clamp required on the "T-bracket" post for 24 inch high signs. Place the clamp 3 inches above bottom of sign when possible.
12. Post open ends shall be fitted with Friction Caps.

REQUIRED SUPPORT

	SIGN DESCRIPTION	SUPPORT
Regulatory	48-inch STOP sign (R1-1)	TY 10BWG(1)XX(T) TY 10BWG(1)XX(P-BM)
Regulatory	60-inch YIELD sign (R1-2)	TY 10BWG(1)XX(T) TY 10BWG(1)XX(P-BM)
Regulatory	48x16-inch ONE-WAY sign (R6-1)	TY 10BWG(1)XX(T) TY 10BWG(1)XX(P-BM)
Regulatory	36x48, 48x36, and 48x48-inch signs	TY 10BWG(1)XX(T)
Regulatory	48x60-inch signs	TY S80(1)XX(T)
Warning	48x48-inch signs (diamond or square)	TY 10BWG(1)XX(T)
Warning	48x60-inch signs	TY S80(1)XX(T)
Warning	48-inch Advance School X-ing sign (S1-1)	TY 10BWG(1)XX(T)
Warning	48-inch School X-ing sign (S2-1)	TY 10BWG(1)XX(T)
Warning	Large Arrow sign (W1-6 & W1-7)	TY 10BWG(1)XX(T)

Texas Department of Transportation
Traffic Operations Division

SIGN MOUNTING DETAILS
SMALL ROADSIDE SIGNS
TRIANGULAR SLIPBASE SYSTEM

SMD(SLIP-3)-08

©TxDOT July 2002

DN: TXDOT	CK: TXDOT	DW: TXDOT	CK: TXDOT
CONT	SECT	JOB	HIGHWAY
			VARIOUS
DIST	COUNTY		SHEET NO.
	DENTON		66

9-08 REVISIONS

26D

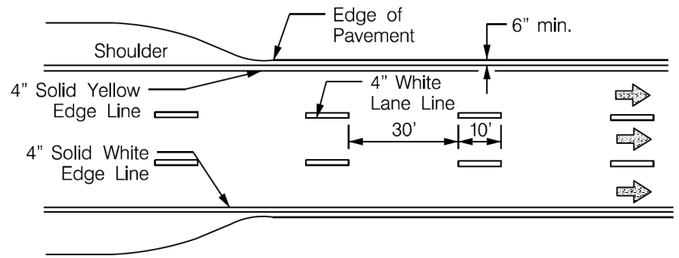

EDGE LINE AND LANE LINES
ONE–WAY ROADWAY
WITH OR WITHOUT SHOULDERS

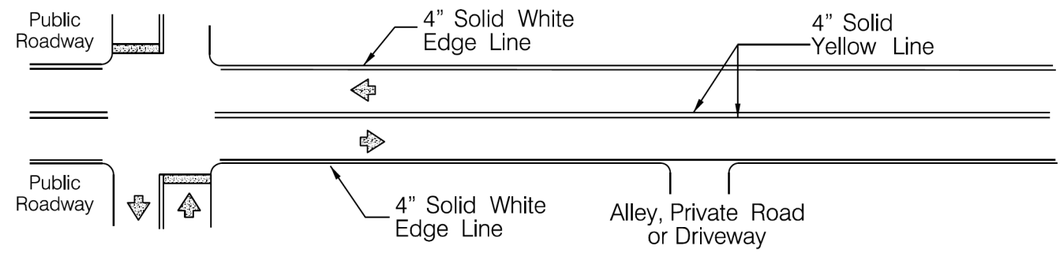

TYPICAL TWO–LANE, TWO–WAY PAVEMENT
MARKINGS THROUGH INTERSECTIONS

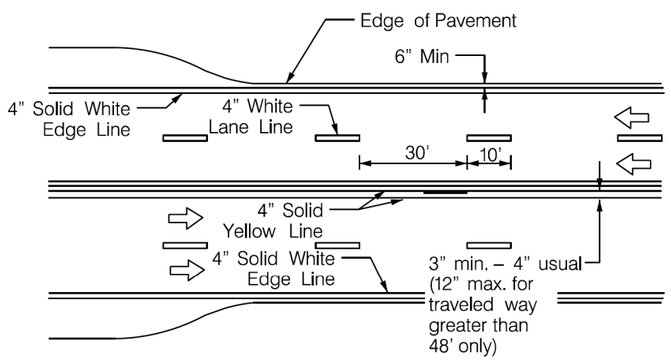

CENTERLINE AND LANE LINES
FOUR LANE, TWO LANE ROADWAY
WITH OR WITHOUT SHOULDERS

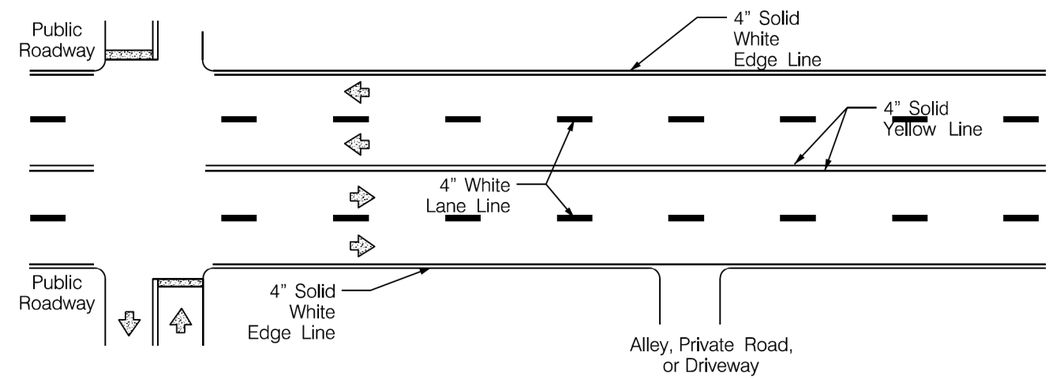

TYPICAL MULTI–LANE, TWO WAY PAVEMENT
MARKINGS THROUGH INTERSECTIONS

MATERIAL SPECIFICATIONS	
REFLECTORIZED PAVEMENT MARKERS	DMS–4200
EPOXY AND ADHESIVES	DMS–6100
BITUMINOUS ADHESI VE FOR PAVEMENT MARKERS	DMS–6130
TRAFFIC PAINT	DMS–8200
HOT APPLIED THERMOPLASTIC	DMS–8220
PERMANENT PREFABRICATED PAVEMENT MARKINGS	DMS–8240

NOTES

1. EDGELINE STRIPING AS SHOWN IN PLANS OR AS DIRECTED BY ENGINEER OR INSPECTOR. DO NOT PLACE EDGELINE LESS THAN 6–INCHES FROM THE EDGE OF PAVEMENT. THIS DISTANCE MAY VARY DUE TO PAVEMENT RAVELING OR OTHER CONDITIONS. EDGELINES ARE NOT REQUIRED IN CURB AND GUTTER SECTIONS OF ROADWAYS.
2. THE TRAVELED WAY INCLUDES ONLY THE PORTION OF THE ROADWAY USED FOR VEHICULAR TRAVEL. IT DOES NOT INCLUDES PARKING LANES, SIDEWALKS, BERMS, OR SHOULDERS. MEASURE TRAVELED WAYS FROM THE INSIDE EDGELINE TO THE INSIDE OF EDGELINE OF A TWO LANE ROADWAY.
3. PAVEMENT MARKING MATERIALS MUST MEET THE REQURIED MATERIAL SPECIFICATIONS AS SPECIFIED BY PLANS.

LEWISVILLE
Deep Roots. Broad Wings. Bright Future.

Standard Details

Typical Standard Pavement Markings (1 of 2)

Revisions:

No.	Description	Date

Engineering Department

Office No. 972–219–3490

www.cityoflewisville.com

Revised Date: 07–24–25

Sheet: 67

3:49:07 PM 10/16/2025
S:\WRDU-Fran\5482\5482-240\400 Production\4 - Design\Plan Set\8. Traffic\Standards\City\5482-TRFC.dgn

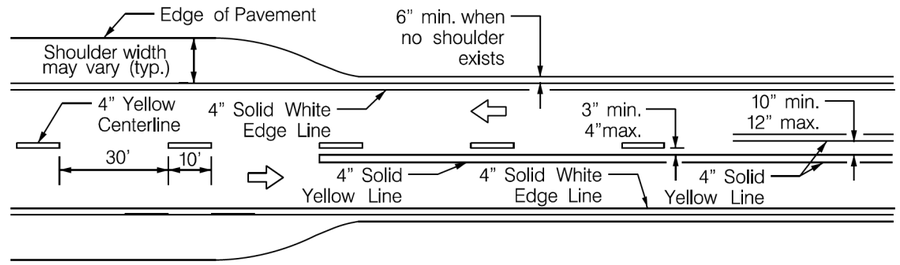

TWO LANE, TWO-WAY ROADWAY WITH OR WITHOUT SHOULDERS

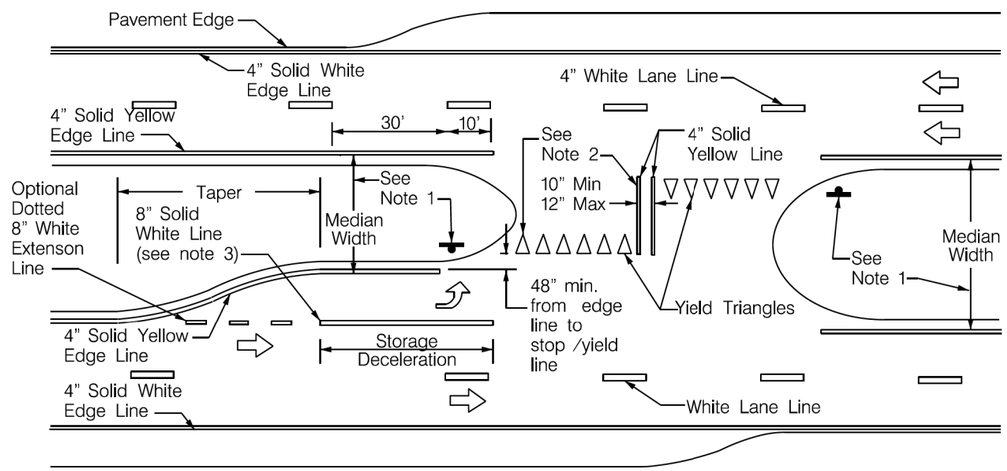

FOUR LANE DIVIDED ROADWAY CROSSOVERS

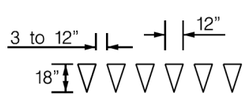

For posted speed on road being marked equal to or less than 40 MPH.

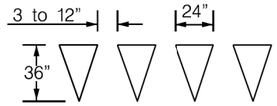

For posted speed on road being marked equal to or greater than 45 MPH.

YIELD LINES

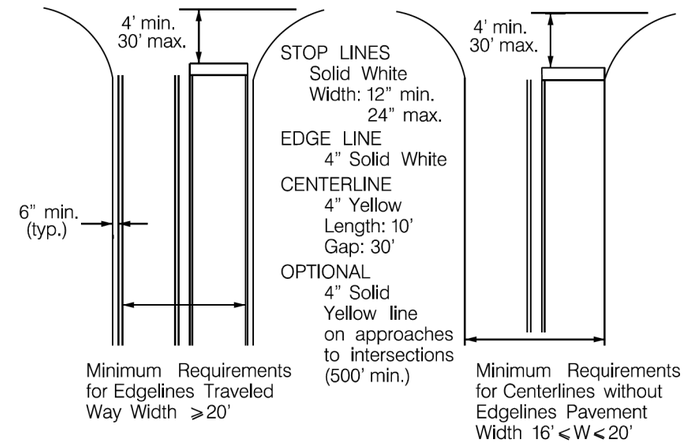

GUIDE FOR PLACEMENT OF STOP LINES EDGE LINE AND CENTERLINE

BASED ON TRAVELED WAY AND PAVEMENT WIDTHS FOR UNDIVIDED HIGHWAYS

NOTES:

1. Where divided highways are separated by median widths of the median opening itself of 30 feet or more, sign median openings as two separate intersections. Each median opening has two separate width measurements, with one measurement for each approach. The narrow median witdth will be the controlling width to determine if signs are required. Yield signs are the typical intersection control. Stop signs are optional as determined by the Engineer.

2. Install median striping (double yellow centerline and stop bars or yield triangles) with a 50 foot or greater median centerline can be placed. Only use stop bars with stop signs. Only use yield triangles with yield signs.

3. Length of turn bays, including taper, deceleration, and storage lengths are as shown on the plans or as directed by Engineer.

LEWISVILLE
Deep Roots. Broad Wings. Bright Future.

Standard Details

Typical Standard Pavement Markings (2 of 2)

Revisions:

No.	Description	Date

Engineering Department

Office No. 972-219-3490

www.cityoflewisville.com

Revised Date: 07-24-25

Sheet: 68

3:49:10 PM 10/16/2025
S:\WHOS-Fran\5482\5482-2401\400 Production\4 - Design\Plan Set\8. Traffic\Standards\City\5482-TRFC.dgn

STORMWATER POLLUTION PREVENTION PLAN (SWP3):

This SWP3 has been developed in accordance with the TPDES Construction General Permit TXR150000 (CGP). The Texas Department of Transportation (TxDOT) ensures that project specifications include adequate best management practices (BMPs) for this project.

For all projects with soil disturbing activity and for projects that have Environmental, Permits, Issues, and Commitments (EPICs) dependent on stormwater controls and water quality measures TxDOT will maintain a SWP3 with all pertinent records, correspondence, environmental documents, etc. at the project field office, Area Office, or electronically.

This SWP3 is consistent with requirements specified in applicable stormwater plans and the projects environmental permits, issues, and commitments (EPICs). A copy of the CGP is included in Attachment 2.12 of the SWP3 binder.

1.0 SITE/PROJECT DESCRIPTION

1.1 PROJECT CONTROL SECTION JOB (CSJ):
N/A

1.2 PROJECT LIMITS:
From: OLD DENTON RD

To: LADY OF THE LAKE BLVD

1.3 PROJECT COORDINATES:
BEGIN: (Lat) 33.026969 ,(Long) 96.917297

END: (Lat) 33.036403 ,(Long) 96.897839

1.4 TOTAL PROJECT AREA (Acres): 24.25

1.5 TOTAL AREA TO BE DISTURBED (Acres): 24.25

1.6 NATURE OF CONSTRUCTION ACTIVITY:
Construct curb bumpouts, adding new ADA ramp facilities, updating signage, and new pavement marking and striping

1.7 MAJOR SOIL TYPES:

Soil Type	Description	
Branyon Clay 1 to 3 percent slopes	85% Branyon and similar soils 15% Minor Components Prime Farmland	Drainage Class: Well Drained Runoff Class: Very High
Ferris-Heiden Clay 5 to 15 percent slopes	50% Ferris and similar soils 40% Heiden and similar soils Not Prime Farmland	Drainage Class: Well Drained Runoff Class: Very High
Ovan Clay Frequently flooded	100% Ovan and similar soils Not Prime Farmland	Drainage Class: Well Drained Runoff Class: Medium
Ovan Clay Occasionally flooded	100% Ovan and similar soils Not Prime Farmland	Drainage Class: Well Drained Runoff Class: Medium
Heiden Clay 3 to 5 percent slopes	85% Heiden and similar soils 15% Minor Components Prime Farmland	Drainage Class: Well Drained Runoff Class: Very High
Vertel Clay 3 to 5 percent slopes	100% Vertel and similar soils Not Prime Farmland	Drainage Class: Well Drained Runoff Class: Very High
Vertel Clay 1 to 3 percent slopes	100% Vertel and similar soils Not Prime Farmland	Drainage Class: Well Drained Runoff Class: Very High

1.8 PROJECT SPECIFIC LOCATIONS (PSLs):
PSLs must be depicted on the Environmental Layout Sheets in Attachment 1.2 of this SWP3. PSLs may be identified during preconstruction meetings or during the construction process. Please choose from the options below:

- ☐ PSLs determined during preconstruction meeting
- ☐ PSLs determined during construction
- ☐ No PSLs planned for construction

Type	Sheet #s

All off-ROW PSLs required by the Contractor are the Contractor's responsibility. The Contractor shall secure all permits required by local, state, federal laws for off-ROW PSLs. The contractor shall provide diagrams, areas of disturbance, acreage, and BMPs for all off-ROW PSLs within one mile of the project.

1.9 CONSTRUCTION ACTIVITIES:
(Use the following list as a starting point when developing the Construction Activity Schedule and Ceasing Record in Attachment 2.5.)

- X Mobilization
- X Install sediment and erosion controls
- ☐ Blade existing topsoil into windrows, prep ROW, clear and grub
- X Remove existing pavement
- ☐ Grading operations, excavation, and embankment
- ☐ Excavate and prepare subgrade for proposed pavement widening
- ☐ Remove existing culverts, safety end treatments (SETs)
- ☐ Remove existing metal beam guard fence (MBGF), bridge rail
- X Install proposed pavement per plans
- ☐ Install culverts, culvert extensions, SETs
- ☐ Install mow strip, MBGF, bridge rail
- ☐ Place flex base
- ☐ Rework slopes, grade ditches
- ☐ Blade windrowed material back across slopes
- ☐ Revegetation of unpaved areas
- X Achieve site stabilization and remove sediment and erosion control measures
- ☐ Other: _____
- ☐ Other: _____
- ☐ Other: _____

1.10 POTENTIAL POLLUTANTS AND SOURCES:

- X Sediment laden stormwater from stormwater conveyance over disturbed area
- X Fuels, oils, and lubricants from construction vehicles, equipment, and storage
- X Solvents, paints, adhesives, etc. from various construction activities
- ☐ Transported soils from offsite vehicle tracking
- X Construction debris and waste from various construction activities
- ☐ Contaminated water from excavation or dewatering pump-out water
- X Sanitary waste from onsite restroom facilities
- X Trash from various construction activities/receptacles
- ☐ Long-term stockpiles of material and waste
- X
- ☐ Other: _____
- ☐ Other: _____
- ☐ Other: _____

1.11 RECEIVING WATERS:
Receiving waters must be depicted on the Environmental Layout Sheets in Attachment 1.2 of this SWP3. Include Segment # for receiving waters.

Tributaries	Classified Waterbody
Elm Fork Trinity River Below Lewisville Lake	Segment ID: 0822 Freshwater Stream
White Rock Creek Above White Rock Lake	Segment ID: 0827A Freshwater Stream
Castle Hills Reflection Pond	

* Add (*) for impaired waterbodies with pollutant in ().

1.12 ROLES AND RESPONSIBILITIES: TxDOT

- X Development of plans and specifications
- X Submit Notice of Intent (NOI) to TCEQ (≥5 acres)
- X Post Construction Site Notice
- X Submit NOI/CSN to local MS4
- X Perform SWP3 inspections
- X Maintain SWP3 records and update to reflect daily operations
- ☐ Complete and submit Notice of Termination to TCEQ
- X Maintain SWP3 records for 3 years
- ☐ Other: _____
- ☐ Other: _____
- ☐ Other: _____

1.13 ROLES AND RESPONSIBILITIES: CONTRACTOR

- X Day To Day Operational Control
- X Submit Notice of Intent (NOI) to TCEQ (≥5 acres)
- X Post Construction Site Notice
- X Submit NOI/CSN to local MS4
- X Maintain schedule of major construction activities
- X Install, maintain and modify BMPs
- ☐ Complete and submit Notice of Termination to TCEQ
- X Maintain SWP3 records for 3 years
- ☐ Other: _____
- ☐ Other: _____
- ☐ Other: _____

1.14 LOCAL MUNICIPAL SEPARATE STORM SEWER SYSTEM (MS4) OPERATOR COORDINATION:

MS4 Entity

STORMWATER POLLUTION PREVENTION PLAN (SWP3)

© 2023

July 2023 Sheet 1 of 2

Texas Department of Transportation

FED. RD. DIV. NO.	PROJECT NO.		SHEET NO.
			68
STATE	STATE DIST.	COUNTY	
TEXAS		DENTON	
CONT.	SECT.	JOB	HIGHWAY NO.
			VARIOUS

STORMWATER POLLUTION PREVENTION PLAN (SWP3):

2.0 BEST MANAGEMENT PRACTICES (BMPs) AND CONTROLS, INSPECTION, AND MAINTENANCE

The Contractor shall be the responsible party for implementing the BMPs described herein and for complying with the SWP3 for control of erosion and sedimentation during day-to-day operations. The Contractor shall implement changes to this SWP3 approved by TxDOT within the times specified in this SWP3 or the CGP.

2.1 EROSION CONTROL AND SOIL STABILIZATION BMPs:

T / P

- X ☐ Protection of Existing Vegetation
- ☐ ☐ Vegetated Buffer Zones
- ☐ ☐ Soil Retention Blankets
- ☐ ☐ Geotextiles
- ☐ ☐ Mulching/ Hydromulching
- ☐ ☐ Soil Surface Treatments
- ☐ ☐ Temporary Seeding
- ☐ X Permanent Planting, Sodding or Seeding
- X ☐ Biodegradable Erosion Control Logs
- ☐ ☐ Rock Filter Dams/ Rock Check Dams
- ☐ ☐ Vertical Tracking
- ☐ ☐ Interceptor Swale
- ☐ ☐ Riprap
- ☐ ☐ Diversion Dike
- ☐ ☐ Temporary Pipe Slope Drain
- ☐ ☐ Embankment for Erosion Control
- ☐ ☐ Paved Flumes
- ☐ ☐ Other: _____
- ☐ ☐ Other: _____
- ☐ ☐ Other: _____
- ☐ ☐ Other: _____

2.2 SEDIMENT CONTROL BMPs:

T / P

- X ☐ Biodegradable Erosion Control Logs
- ☐ ☐ Dewatering Controls
- X ☐ Inlet Protection
- ☐ ☐ Rock Filter Dams/ Rock Check Dams
- ☐ ☐ Sandbag Berms
- X ☐ Sediment Control Fence
- X ☐ Stabilized Construction Exit
- ☐ ☐ Floating Turbidity Barrier
- ☐ ☐ Vegetated Buffer Zones
- ☐ ☐ Vegetated Filter Strips
- ☐ ☐ Other: _____
- ☐ ☐ Other: _____
- ☐ ☐ Other: _____
- ☐ ☐ Other: _____

Refer to the Environmental Layout Sheets/ SWP3 Layout Sheets located in Attachment 1.2 of this SWP3

Sediment control BMPs requiring design capacity calculations (See SWP3 Attachment 1.3.):

T / P

- ☐ ☐ Sediment Trap
  - ☐ Calculated volume runoff from 2-year, 24-hour storm for each acre of disturbed area
  - ☐ 3,600 cubic feet of storage per acre drained
- ☐ ☐ Sedimentation Basin
  - ☐ Not required (<10 acres disturbed)
  - ☐ Required (>10 acres) and implemented.
    - ☐ Calculated volume runoff from 2-year, 24-hour storm for each acre of disturbed area
    - ☐ 3,600 cubic feet of storage per acre drained
  - X Required (>10 acres), but not feasible due to:
    - X Available area/Site geometry
    - ☐ Site slope/Drainage patterns
    - ☐ Site soils/Geotechnical factors
    - ☐ Public safety
    - ☐ Other: _____

2.3 PERMANENT CONTROLS:

(Coordinate post-construction BMPs with appropriate TxDOT maintenance sections.)

BMPs To Be Left In Place Post Construction:

Type	Stationing	
	From	To

Refer to the Environmental Layout Sheets/ SWP3 Layout Sheets located in Attachment 1.2 of this SWP3

2.4 OFFSITE VEHICLE TRACKING CONTROLS:

- X Excess dirt/mud on road removed daily
- X Haul roads dampened for dust control
- ☐ Loaded haul trucks to be covered with tarpaulin
- X Stabilized construction exit
- ☐ Daily street sweeping
- ☐ Other: _____
- ☐ Other: _____
- ☐ Other: _____
- ☐ Other: _____

2.5 POLLUTION PREVENTION MEASURES:

- ☐ Chemical Management
- X Concrete and Materials Waste Management
- X Debris and Trash Management
- X Dust Control
- ☐ Sanitary Facilities
- ☐ Other: _____
- ☐ Other: _____
- ☐ Other: _____
- ☐ Other: _____

2.6 VEGETATED BUFFER ZONES:

Natural vegetated buffers shall be maintained as feasible to protect adjacent surface waters. If vegetated natural buffer zones are not feasible due to site geometry, the appropriate additional sediment control measures have been incorporated into this SWP3.

Type	Stationing	
	From	To

Refer to the Environmental Layout Sheets/ SWP3 Layout Sheets located in Attachment 1.2 of this SWP3

2.7 ALLOWABLE NON-STORMWATER DISCHARGES:

- X Fire hydrant flushings
- X Irrigation drainage
- X Pavement washwater (where spills or leaks have not occurred, and detergents are not used)
- X Potable water sources
- X Springs
- X Uncontaminated groundwater
- X Water used to wash vehicles or control dust
- X Other allowable non-stormwater discharges as allowed by TPDES GP TXR150000.

2.8 DEWATERING:

Dewatering discharges of accumulated stormwater, groundwater, and surface water including discharges from dewatering of trenches, excavations, foundations, vaults, and other points of accumulation are prohibited unless managed by appropriate controls to prevent and minimize the offsite discharge of sediment and other pollutants.

2.9 INSPECTIONS:

All disturbed areas and erosion and sediment control devices shall be inspected at least once every seven (7) days. Inspections shall be performed by TxDOT as indicated on the Field Inspection and Maintenance Report Form 2118 and retained in Attachment 2.5 of this SWP3.

When dewatering activities are present, a daily inspection will be conducted once per day during those activities and documented in accordance with CGP and TxDOT requirements.

2.10 MAINTENANCE:

Control measures shall be properly installed according to specifications. If it is determined that a BMP or control measure is not operating effectively, maintenance must be accomplished as soon as possible and before the next anticipated rain event, but in no case later than 7 calendar days after being able to access the site. Maintenance shall be performed by the Contractor as indicated on the Field Inspection and Maintenance Report Form 2118 and retained in Attachment 2.5 of this SWP3.

STORMWATER POLLUTION PREVENTION PLAN (SWP3)

© 2023

July 2023 Sheet 2 of 2

Texas Department of Transportation

FED. RD. DIV. NO.	PROJECT NO.		SHEET NO.
			69
STATE	STATE DIST.	COUNTY	
TEXAS		DENTON	
CONT.	SECT.	JOB	HIGHWAY NO.
			VARIOUS

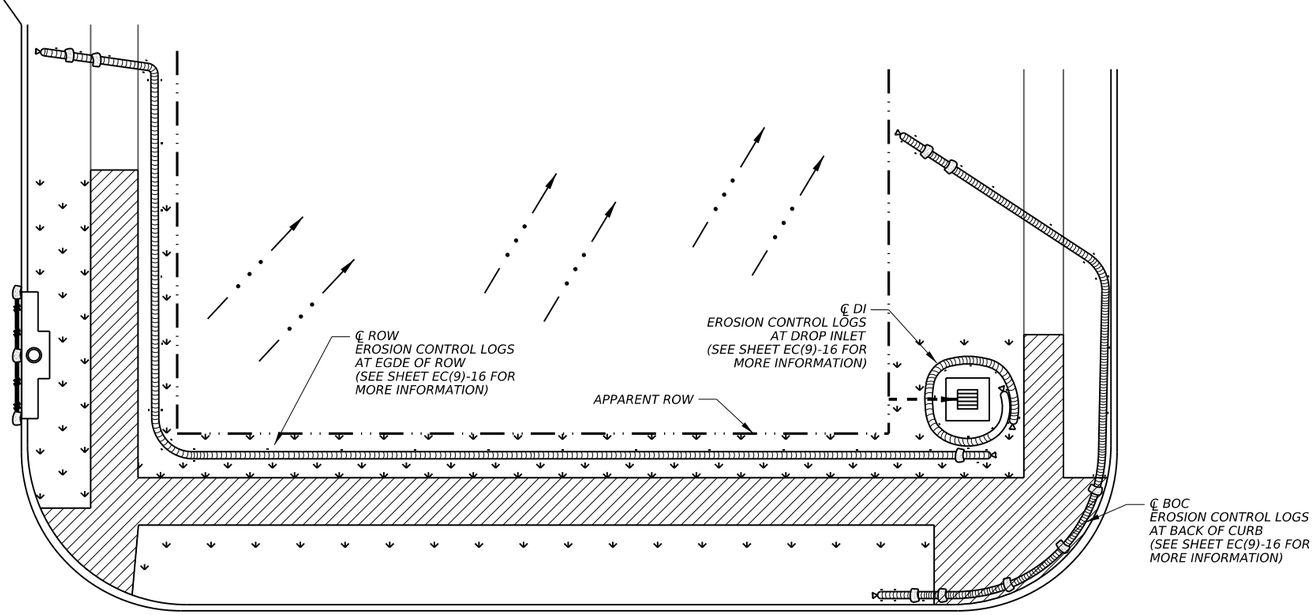

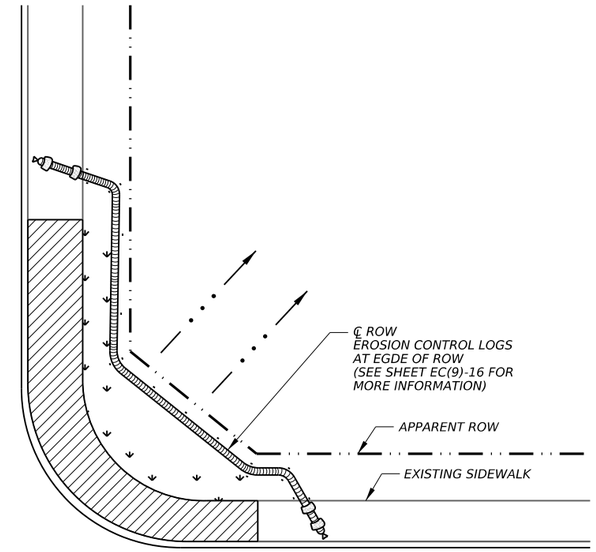

LEGEND

- BLOCK SODDING
- FLOW DIRECTION
- EROSION CONTROL LOG
- WOOD OR METAL STAKES (AS APPROVED BY THE ENGINEER)
- SANDBAGS
- EXISTING FEATURES
- PROPOSED WORK AREA

NOTES:

REFERENCE ENVIRONMENTAL PERMITS, ISSUES, AND COMMITMENTS (EPIC) AND STORM WATER POLLUTION PREVENTION PLAN (SW3P) SHEETS FOR SPECIFIC CONSTRUCTION CONSIDERATIONS OR REQUIREMENTS.

EXAMPLES SHOWN ON THE SHEET ARE FOR GENERAL GUIDANCE AND MAY BE MODIFIED AS DIRECTED BY THE ENGINEER.

SITE CONDITIONS MAY DICTATE ADDITIONAL COUNTERMEASURES AS DIRECTED BY THE ENGINNER.

USE ADDITIONAL STAKES OR SAND BAGS AS NEEDED TO HOLD IN PLACE (NSPI).

INSTALLATION OF COUNTERMEASURES MUST BE APPROVED BY THE ENGINEER PRIOR TO PLACEMENT.

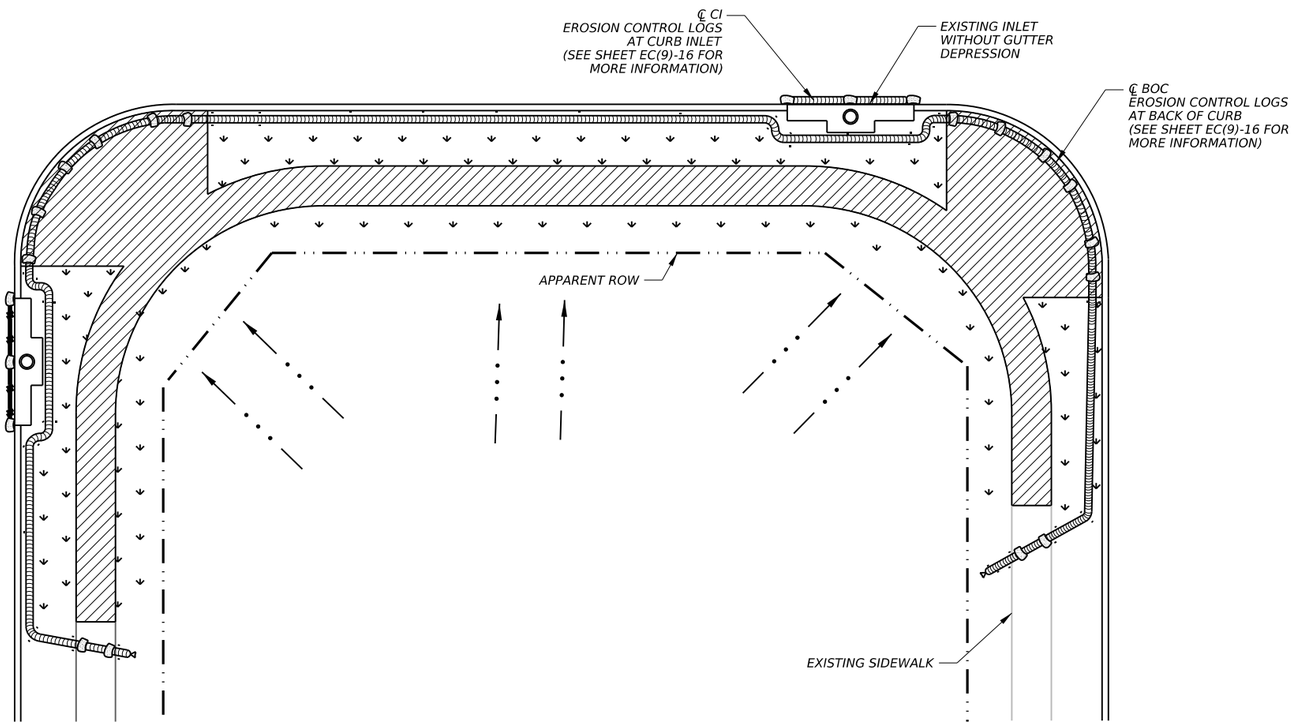

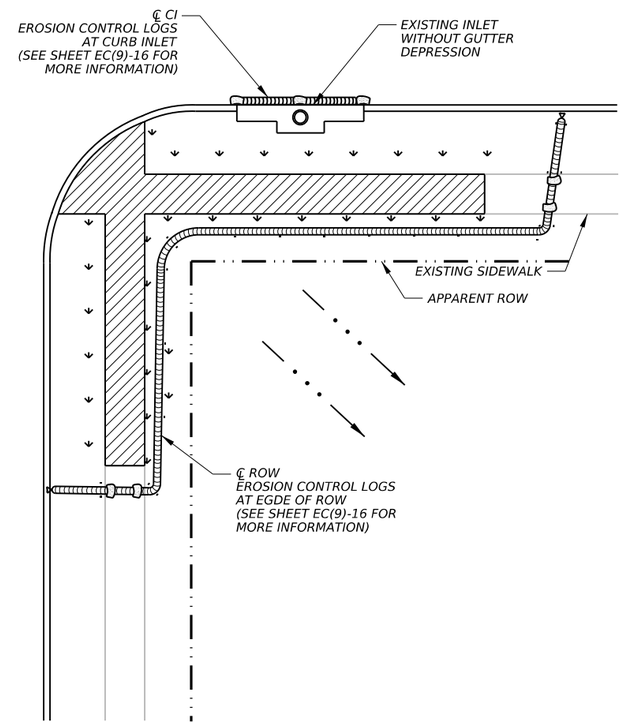

0 40 80
SCALE IN FEET

LJA Engineering, Inc.
FRN - F-1386

LEWISVILLE
Deep Roots. Broad Wings. Bright Future.

CITY OF LEWISVILLE

SW3P EXAMPLE LAYOUT

SHEET 1 OF 1

CONT	SECT	JOB	HIGHWAY
			VARIOUS
DIST	COUNTY		SHEET NO.
	DENTON		70

3:49:21 PM 10/16/2025
S:\HOU-Fcn\5482\5482-2401\400 Production\4 - Design\Plan Set\9. Environmental\5482ENLL.dgn

DISCLAIMER:
The use of this standard is governed by the "Texas Engineering Practice Act". No warranty of any kind is made by TxDOT for any purpose whatsoever. TxDOT assumes no responsibility for the conversion of this standard to other formats or for incorrect results or damages resulting from its use.

DATE: 10/16/2025
FILE: S:\WHOU-Tran\5482\5482-2401\400 Production\4 - Design\Plan Set\9. Environmental\Standards\TxDOT\epic.dgn

I. STORMWATER POLLUTION PREVENTION-CLEAN WATER ACT SECTION 402

TPDES TXR 150000: Stormwater Discharge Permit or Construction General Permit required for projects with 1 or more acres disturbed soil. Projects with any disturbed soil must protect for erosion and sedimentation in accordance with Item 506.

List MS4 Operator(s) that may receive discharges from this project. They may need to be notified prior to construction activities.

1.

2.

☐ No Action Required ☒ Required Action

Action No.

1. Prevent stormwater pollution by controlling erosion and sedimentation in accordance with TPDES Permit TXR 150000
2. Comply with the SW3P and revise when necessary to control pollution or required by the Engineer.
3. Post Construction Site Notice (CSN) with SW3P information on or near the site, accessible to the public and TCEQ, EPA or other inspectors.
4. When Contractor project specific locations (PSL's) increase disturbed soil area to 5 acres or more, submit NOI to TCEQ and the Engineer.

II. WORK IN OR NEAR STREAMS, WATERBODIES AND WETLANDS CLEAN WATER ACT SECTIONS 401 AND 404

USACE Permit required for filling, dredging, excavating or other work in any water bodies, rivers, creeks, streams, wetlands or wet areas.

The Contractor must adhere to all of the terms and conditions associated with the following permit(s):

☐ No Permit Required
☐ Nationwide Permit 14 - PCN not Required (less than 1/10th acre waters or wetlands affected)
☒ Nationwide Permit 14 - PCN Required (1/10 to <1/2 acre, 1/3 in tidal waters)
☐ Individual 404 Permit Required
☐ Other Nationwide Permit Required: NWP# _____

Required Actions: List waters of the US permit applies to, location in project and check Best Management Practices planned to control erosion, sedimentation and post-project TSS.

1. Castle Hills Reflection Pond
2. Maintain a neat and clean worksite next to the water and do not allow any debris to fall into the water.

The elevation of the ordinary high water marks of any areas requiring work to be performed in the waters of the US requiring the use of a nationwide permit can be found on the Bridge Layouts.

Best Management Practices:

Erosion	Sedimentation	Post-Construction TSS
☐ Temporary Vegetation	☒ Silt Fence	☐ Vegetative Filter Strips
☐ Blankets/Matting	☒ Rock Berm	☐ Retention/Irrigation Systems
☐ Mulch	☐ Triangular Filter Dike	☐ Extended Detention Basin
☐ Sodding	☐ Sand Bag Berm	☐ Constructed Wetlands
☐ Interceptor Swale	☐ Straw Bale Dike	☐ Wet Basin
☐ Diversion Dike	☐ Brush Berms	☐ Erosion Control Compost
☐ Erosion Control Compost	☐ Erosion Control Compost	☐ Mulch Filter Berm and Socks
☐ Mulch Filter Berm and Socks	☐ Mulch Filter Berm and Socks	☐ Compost Filter Berm and Socks
☐ Compost Filter Berm and Socks	☐ Compost Filter Berm and Socks	☐ Vegetation Lined Ditches
	☐ Stone Outlet Sediment Traps	☐ Sand Filter Systems
	☐ Sediment Basins	☐ Grassy Swales

III. CULTURAL RESOURCES

Refer to TxDOT Standard Specifications in the event historical issues or archeological artifacts are found during construction. Upon discovery of archeological artifacts (bones, burnt rock, flint, pottery, etc.) cease work in the immediate area and contact the Engineer immediately.

☒ No Action Required ☐ Required Action

Action No.

1.

2.

3.

4.

IV. VEGETATION RESOURCES

Preserve native vegetation to the extent practical.
Contractor must adhere to Construction Specification Requirements Specs 162, 164, 192, 193, 506, 730, 751, 752 in order to comply with requirements for invasive species, beneficial landscaping, and tree/brush removal commitments.

☐ No Action Required ☒ Required Action

Action No.

1. Preserve native vegetation to the extent practical. Contractor must adhere to Construction Specifications Requirements Specs 162, 164, 192, 193, 506, 730, 751, 752 in order to comply with requirements for invasive species, beneficial landscaping, and tree/bush removal commitments.
2. Any equipment that comes in to contact with water is required to follow TPWD Clean, Drain, and Dry procedures to protect against the spreading of invasive aquatic species.

V. FEDERAL LISTED, PROPOSED THREATENED, ENDANGERED SPECIES, CRITICAL HABITAT, STATE LISTED SPECIES, CANDIDATE SPECIES AND MIGRATORY BIRDS.

☐ No Action Required ☒ Required Action

Action No.

1.

2.

3.

4.

If any of the listed species are observed, cease work in the immediate area, do not disturb species or habitat and contact the Engineer immediately. The work may not remove active nests from bridges and other structures during nesting season of the birds associated with the nests. If caves or sinkholes are discovered, cease work in the immediate area, and contact the Engineer immediately.

LIST OF ABBREVIATIONS

BMP:	Best Management Practice	SPCC:	Spill Prevention Control and Countermeasure
CGP:	Construction General Permit	SW3P:	Storm Water Pollution Prevention Plan
DSHS:	Texas Department of State Health Services	PCN:	Pre-Construction Notification
FHWA:	Federal Highway Administration	PSL:	Project Specific Location
MOA:	Memorandum of Agreement	TCEQ:	Texas Commission on Environmental Quality
MOU:	Memorandum of Understanding	TPDES:	Texas Pollutant Discharge Elimination System
MS4:	Municipal Separate Stormwater Sewer System	TPWD:	Texas Parks and Wildlife Department
MBTA:	Migratory Bird Treaty Act	TxDOT:	Texas Department of Transportation
NOT:	Notice of Termination	T&E:	Threatened and Endangered Species
NWP:	Nationwide Permit	USACE:	U.S. Army Corps of Engineers
NOI:	Notice of Intent	USFWS:	U.S. Fish and Wildlife Service

VI. HAZARDOUS MATERIALS OR CONTAMINATION ISSUES

General (applies to all projects):

Comply with the Hazard Communication Act (the Act) for personnel who will be working with hazardous materials by conducting safety meetings prior to beginning construction and making workers aware of potential hazards in the workplace. Ensure that all workers are provided with personal protective equipment appropriate for any hazardous materials used.

Obtain and keep on-site Material Safety Data Sheets (MSDS) for all hazardous products used on the project, which may include, but are not limited to the following categories: Paints, acids, solvents, asphalt products, chemical additives, fuels and concrete curing compounds or additives. Provide protected storage, off bare ground and covered, for products which may be hazardous. Maintain product labelling as required by the Act.

Maintain an adequate supply of on-site spill response materials, as indicated in the MSDS. In the event of a spill, take actions to mitigate the spill as indicated in the MSDS, in accordance with safe work practices, and contact the District Spill Coordinator immediately. The Contractor shall be responsible for the proper containment and cleanup of all product spills.

Contact the Engineer if any of the following are detected:

* Dead or distressed vegetation (not identified as normal)
* Trash piles, drums, canister, barrels, etc.
* Undesirable smells or odors
* Evidence of leaching or seepage of substances

Does the project involve any bridge class structure rehabilitation or replacements (bridge class structures not including box culverts)?

☐ Yes ☒ No

If "No", then no further action is required.
If "Yes", then TxDOT is responsible for completing asbestos assessment/inspection.

Are the results of the asbestos inspection positive (is asbestos present)?

☐ Yes ☒ No

If "Yes", then TxDOT must retain a DSHS licensed asbestos consultant to assist with the notification, develop abatement/mitigation procedures, and perform management activities as necessary. The notification form to DSHS must be postmarked at least 15 working days prior to scheduled demolition.

If "No", then TxDOT is still required to notify DSHS 15 working days prior to any scheduled demolition.

In either case, the Contractor is responsible for providing the date(s) for abatement activities and/or demolition with careful coordination between the Engineer and asbestos consultant in order to minimize construction delays and subsequent claims.

Any other evidence indicating possible hazardous materials or contamination discovered on site. Hazardous Materials or Contamination Issues Specific to this Project:

☐ No Action Required ☒ Required Action

Action No.

1. The Clean Water Act
2.
3.

VII. OTHER ENVIRONMENTAL ISSUES

(includes regional issues such as Edwards Aquifer District, etc.)

☒ No Action Required ☐ Required Action

Action No.

1.

2.

3.

Texas Department of Transportation — Design Division Standard

ENVIRONMENTAL PERMITS, ISSUES AND COMMITMENTS

EPIC

FILE: epic.dgn	DN: TxDOT	CK: RG	DW: VP	CK: AR
©TxDOT: February 2015	CONT	SECT	JOB	HIGHWAY
REVISIONS 12-12-2011 (DS)				VARIOUS
05-07-14 ADDED NOTE SECTION IV.	DIST		COUNTY	SHEET NO.
01-23-2015 SECTION I (CHANGED ITEM 1122 TO ITEM 506, ADDED GRASSY SWALES.			DENTON	71

DISCLAIMER:
The use of this standard is governed by the "Texas Engineering Practice Act". No warranty of any kind is made by TxDOT for any purpose whatsoever. TxDOT assumes no responsibility for the conversion of this standard to other formats or for incorrect results or damages resulting from its use.

DATE 10/16/2025
FILE S:\WHOU-Tran\5482\5482-2401\400 Production\4 - Design\Plan Set\9. Environmental\Standards\TxDOT\ec116.dgn

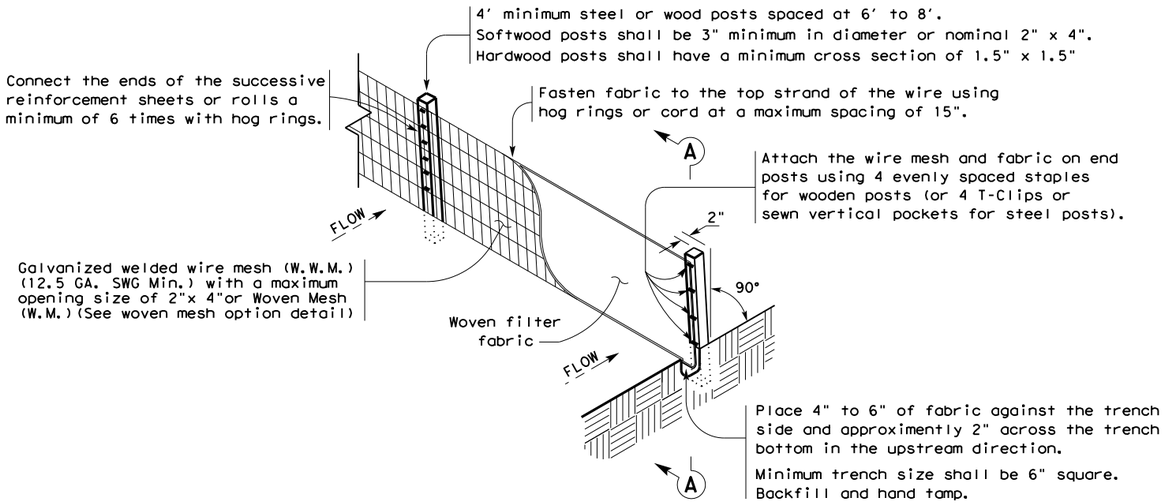

TEMPORARY SEDIMENT CONTROL FENCE

SCF

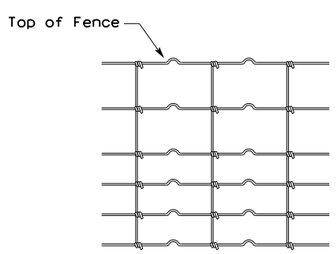

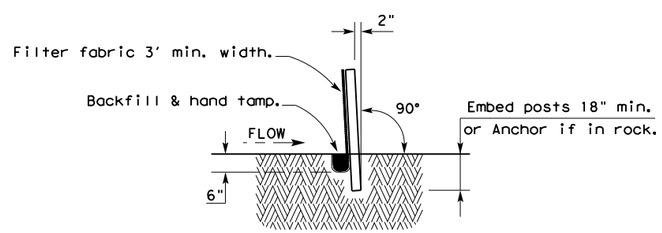

SECTION A-A

HINGE JOINT KNOT WOVEN MESH (OPTION) DETAIL

Galvanized hinge joint knot woven mesh (12.5 GA.SWG Min.) requires a minimum of five horizontal wires spaced at a maximum of 12 inches apart and all vertical wires spaced at a maximum of 12 inches apart.

SEDIMENT CONTROL FENCE USAGE GUIDELINES

A sediment control fence may be constructed near the downstream perimeter of a disturbed area along a contour to intercept sediment from overland runoff. A 2 year storm frequency may be used to calculate the flow rate to be filtered.

Sediment control fence should be sized to filter a maximum flow through rate of 100 GPM/FT^2. Sediment control fence is not recommended to control erosion from a drainage area larger than 2 acres.

LEGEND

Sediment Control Fence

SCF

GENERAL NOTES

1. Vertical tracking is required on projects where soil distributing activities have occurred unless otherwise approved.
2. Perform vertical tracking on slopes to temporarily stabilize soil.
3. Provide equipment with a track undercarriage capable of producing linear soil impressions measuring a minimum of 12" in length by 2" to 4" in width by 1/2" to 2" in depth.
4. Do not exceed 12" between track impressions.
5. Install continous linear track impressions where the minimum 12" length impressions are perpendicular to the slope or direction of water flow.

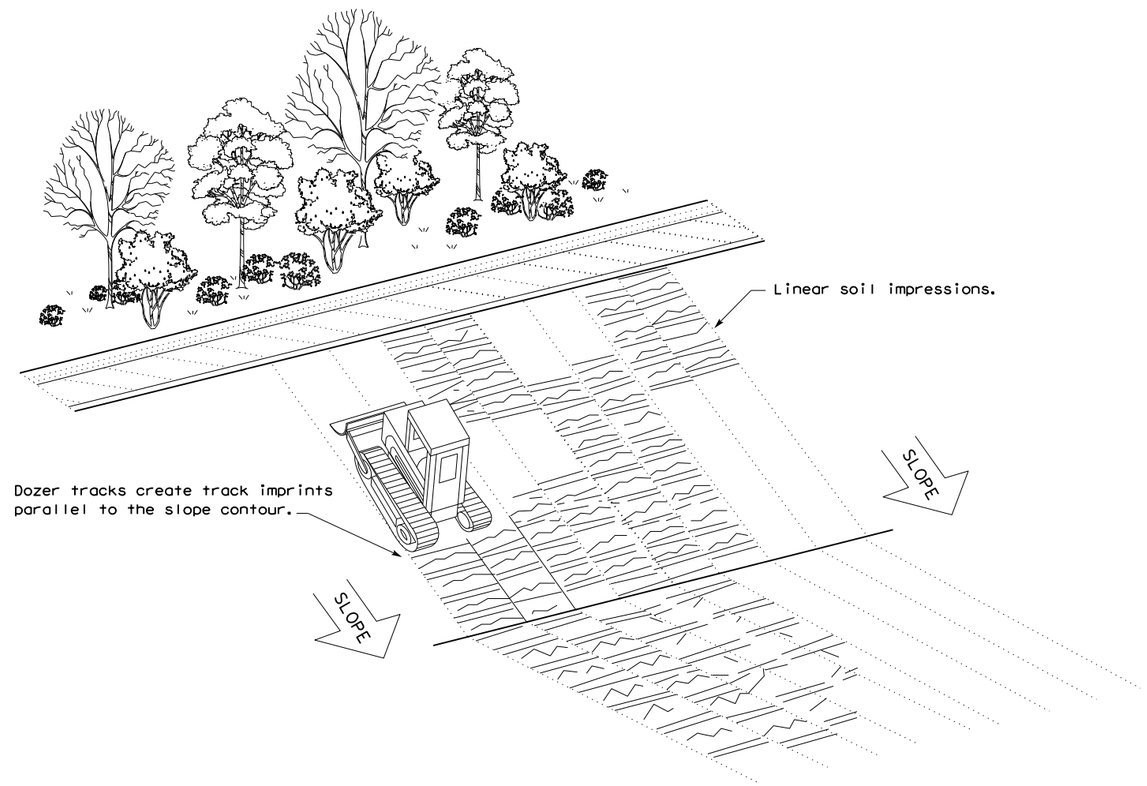

VERTICAL TRACKING

Texas Department of Transportation

Design Division Standard

TEMPORARY EROSION, SEDIMENT AND WATER POLLUTION CONTROL MEASURES

FENCE & VERTICAL TRACKING

EC(1)-16

FILE: ec116	DN: TxDOT	CK: KM	DW: VP	DN/CK: LS
© TxDOT: JULY 2016	CONT	SECT	JOB	HIGHWAY
REVISIONS				VARIOUS
	DIST	COUNTY		SHEET NO.
		DENTON		73

DISCLAIMER:
The use of this standard is governed by the "Texas Engineering Practice Act". No warranty of any kind is made by TxDOT for any purpose whatsoever. TxDOT assumes no responsibility for the conversion of this standard to other formats or for incorrect results or damages resulting from its use.

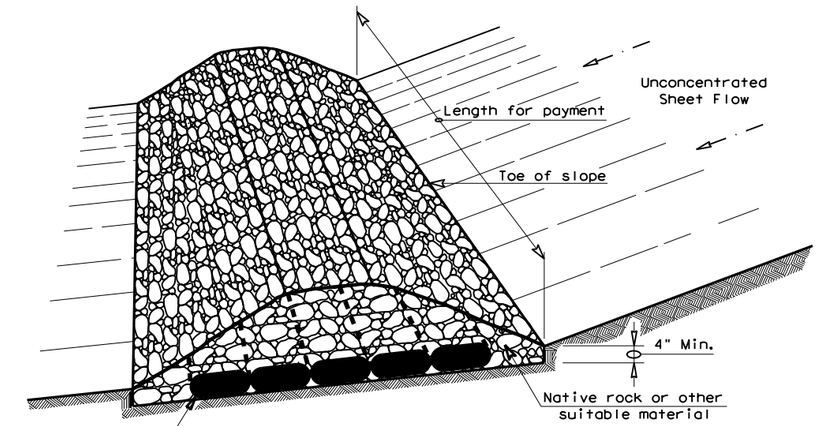

FILTER DAM AT TOE OF SLOPE

RFD1

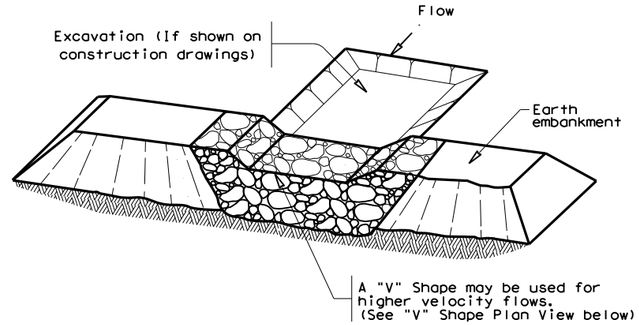

FILTER DAM AT SEDIMENT TRAP

RFD1 OR RFD2

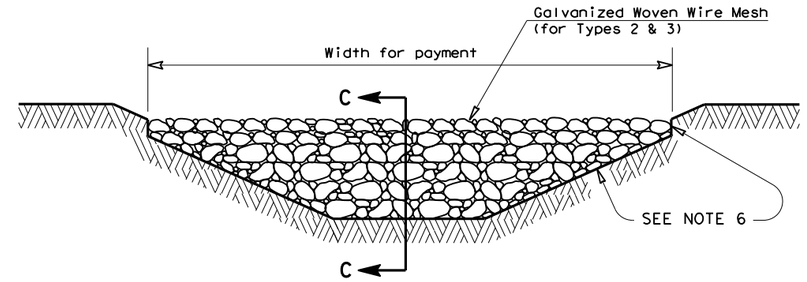

FILTER DAM AT CHANNEL SECTIONS

RFD1 OR RFD2 OR RFD3

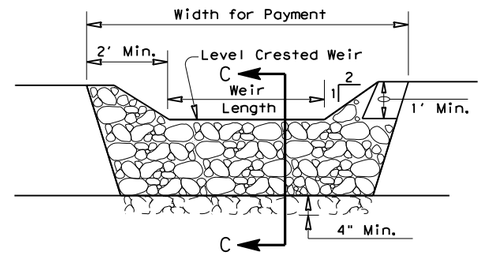

PROFILE

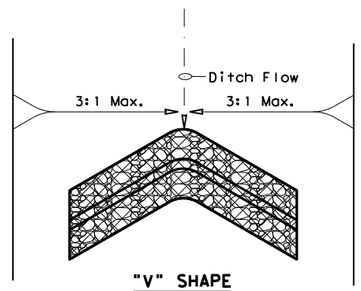

"V" SHAPE
PLAN VIEW

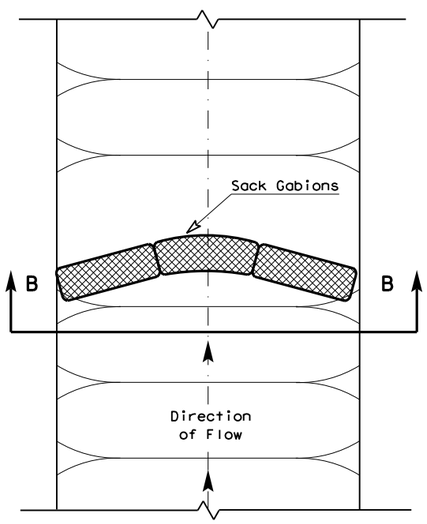

PLAN VIEW

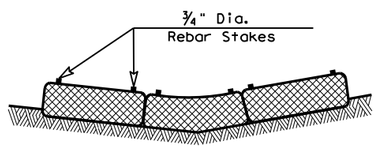

SECTION B-B

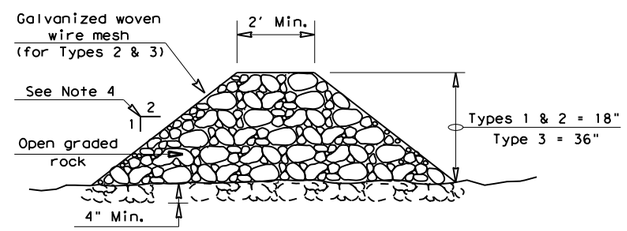

SECTION C-C

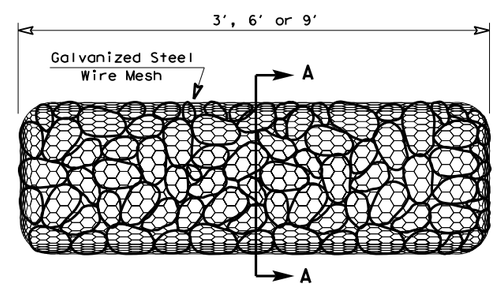

TYPE 4 (SACK GABIONS)

RFD4

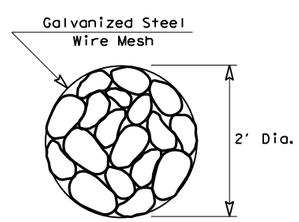

SECTION A-A

ROCK FILTER DAM USAGE GUIDELINES

Rock Filter Dams should be constructed downstream from disturbed areas to intercept sediment from overland runoff and/or concentrated flow. The dams should be sized to filter a maximum flow through rate of 60 GPM/FT^2 of cross sectional area. A 2 year storm frequency may be used to calculate the flow rate.

Type 1 (18" high with no wire mesh) (3" to 6" aggregate): Type 1 may be used at the toe of slopes, around inlets, in small ditches, and at dike or swale outlets. This type of dam is recommended to control erosion from a drainage area of 5 acres or less. Type 1 may not be used in concentrated high velocity flows (approximently 8 Ft/Sec or more) in which aggregate wash out may occur. Sandbags may be used at the embedded foundation (4" deep min.) for better filtering efficiency of low flows if called for on the plans or directed by the Engineer.

Type 2 (18" high with wire mesh) (3" to 6" aggregate): Type 2 may be used in ditches and at dike or swale outlets.

Type 3 (36" high with wire mesh) (4" to 8" aggregate): Type 3 may be used in stream flow and should be secured to the stream bed.

Type 4 (Sack gabions) (3" to 6" aggregate): Type 4 May be used in ditches and smaller channels to form an erosion control dam.

Type 5: Provide rock filter dams as shown on plans.

GENERAL NOTES

1. If shown on the plans or directed by the Engineer, filter dams should be placed near the toe of slopes where erosion is anticipated, upstream and/or downstream at drainage structures, and in roadway ditches and channels to collect sediment.
2. Materials (aggregate, wire mesh, sandbags, etc.) shall be as indicated by the specification for "Rock Filter Dams for Erosion and Sedimentation Control".
3. The rock filter dam dimensions shall be as indicated on the SW3P plans.
4. Side slopes should be 2:1 or flatter. Dams within the safety zone shall have sideslopes of 6:1 or flatter.
5. Maintain a minimum of 1' between top of rock filter dam weir and top of embankment for filter dams at sediment traps.
6. Filter dams should be embedded a minimum of 4" into existing ground.
7. The sediment trap for ponding of sediment laden runoff shall be of the dimensions shown on the plans.
8. Rock filter dam types 2 & 3 shall be secured with 20 gauge galvanized woven wire mesh with 1" diameter hexagonal openings. The aggregate shall be placed on the mesh to the height & slopes specified. The mesh shall be folded at the upstream side over the aggregate and tightly secured to itself on the downstream side using wire ties or hog rings. For in stream use, the mesh should be secured or staked to the stream bed prior to aggregate placement.
9. Sack Gabions should be staked down with ¾" dia. rebar stakes, and have a double-twisted hexagonal weave with a nominal mesh opening of 2 ½" x 3 ¼"
10. Flow outlet should be onto a stabilized area (vegetation, rock, etc.).
11. The guidelines shown hereon are suggestions only and may be modified by the Engineer.

PLAN SHEET LEGEND

Type 1 Rock Filter Dam	RFD1
Type 2 Rock Filter Dam	RFD2
Type 3 Rock Filter Dam	RFD3
Type 4 Rock Filter Dam	RFD4

Texas Department of Transportation — Design Division Standard

TEMPORARY EROSION, SEDIMENT AND WATER POLLUTION CONTROL MEASURES

ROCK FILTER DAMS

EC(2)-16

FILE: ec216	DN: TxDOT	CK: KM	DW: VP	DN/CK: LS
© TxDOT: JULY 2016	CONT	SECT	JOB	HIGHWAY
REVISIONS				VARIOUS
	DIST	COUNTY		SHEET NO.
		DENTON		74

DATE: 10/16/2025
FILE: S:\WHOU-Tran\5482\5482-2401\400 Production\4 - Design\Plan Set\9. Environmental\Standards\TxDOT\ec216.dgn

DISCLAIMER:
The use of this standard is governed by the "Texas Engineering Practice Act". No warranty of any kind is made by TxDOT for any purpose whatsoever. TxDOT assumes no responsibility for the conversion of this standard to other formats or for incorrect results or damages resulting from its use.

DATE: 10/16/2025
FILE: S:\WHOU-Tran\5482\5482-2401\400 Production\4 - Design\Plan Set\9. Environmental\Standards\TxDOT\ec916.dgn

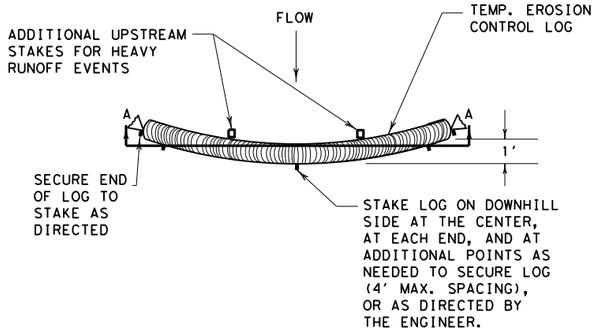

PLAN VIEW

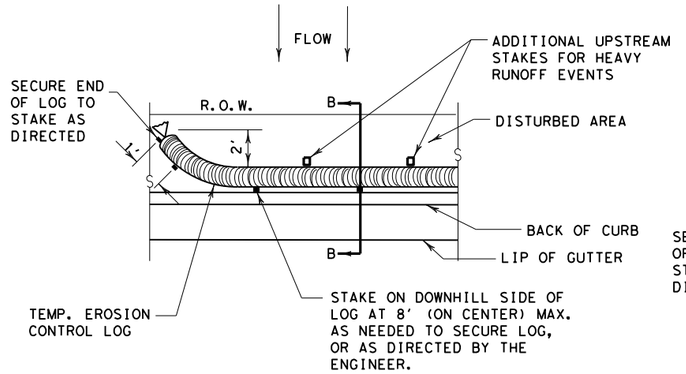

PLAN VIEW

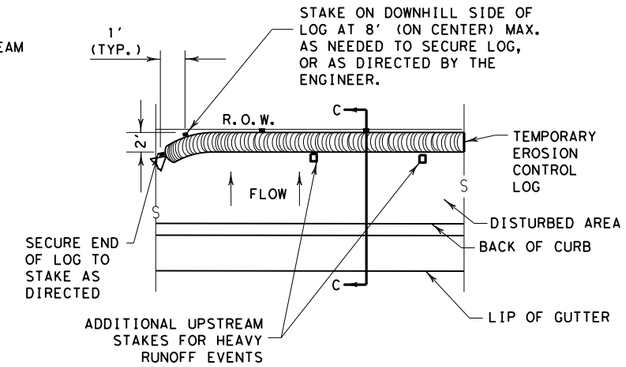

PLAN VIEW

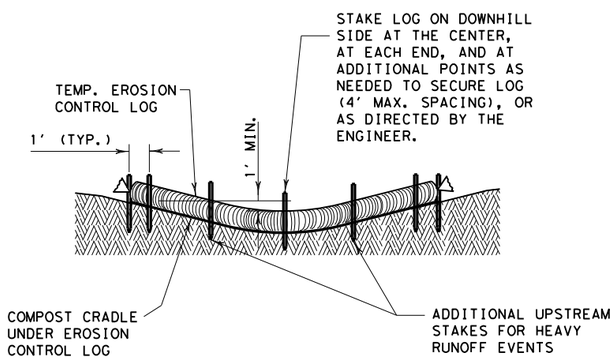

SECTION A-A

EROSION CONTROL LOG DAM

CL-D

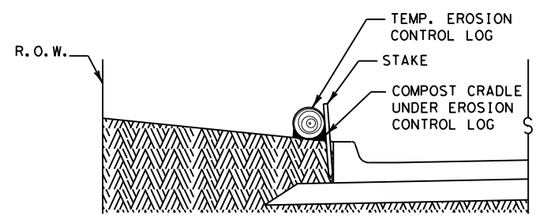

SECTION B-B

EROSION CONTROL LOG AT BACK OF CURB

CL-BOC

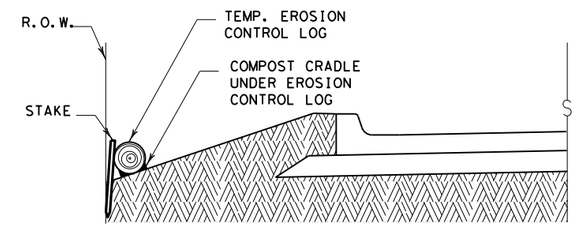

SECTION C-C

EROSION CONTROL LOG AT EDGE OF RIGHT-OF-WAY

CL-ROW

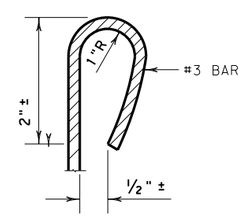

REBAR STAKE DETAIL

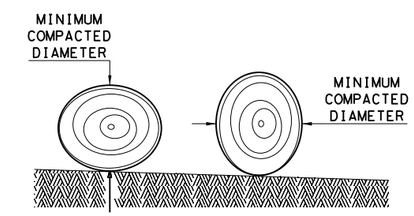

DIAMETER MEASUREMENTS OF EROSION CONTROL LOGS SPECIFIED IN PLANS

GENERAL NOTES:

1. EROSION CONTROL LOGS SHALL BE INSTALLED IN ACCORDANCE WITH MANFACTURER'S RECOMMENDATIONS, OR AS DIRECTED BY THE ENGINEER.
2. LENGTHS OF EROSION CONTROL LOGS SHALL BE IN ACCORDANCE WITH MANUFACTURER'S RECOMMENDATIONS AND AS REQUIRED FOR THE PURPOSE INTENDED.
3. UNLESS OTHERWISE DIRECTED, USE BIODEGRADABLE OR PHOTODEGRADABLE CONTAINMENT MESH ONLY WHERE LOG WILL REMAIN IN PLACE AS PART OF A VEGETATIVE SYSTEM. FOR TEMPORARY INSTALLATIONS, USE RECYCLABLE CONTAINMENT MESH.
4. FILL LOGS WITH SUFFICIENT FILTER MATERIAL TO ACHIEVE THE MINIMUM COMPACTED DIAMETER SPECIFIED IN THE PLANS WITHOUT EXCESSIVE DEFORMATION.
5. STAKES SHALL BE 2" X 2" WOOD OR #3 REBAR, 2'-4' LONG, EMBEDDED SUCH THAT 2" PROTRUDES ABOVE LOG, OR AS DIRECTED BY THE ENGINEER.
6. DO NOT PLACE STAKES THROUGH CONTAINMENT MESH.
7. COMPOST CRADLE MATERIAL IS INCIDENTAL & WILL NOT BE PAID FOR SEPARATELY.
8. SANDBAGS USED AS ANCHORS SHALL BE PLACED ON TOP OF LOGS & SHALL BE OF SUFFICIENT SIZE TO HOLD LOGS IN PLACE.
9. TURN THE ENDS OF EACH ROW OF LOGS UPSLOPE TO PREVENT RUNOFF FROM FLOWING AROUND THE LOG.
10. FOR HEAVY RUNOFF EVENTS, ADDITIONAL UPSTREAM STAKES MAY BE NECESSARY TO KEEP LOG FROM FOLDING IN ON ITSELF.

LEGEND

- CL-D — EROSION CONTROL LOG DAM
- CL-BOC — EROSION CONTROL LOG AT BACK OF CURB
- CL-ROW — EROSION CONTROL LOG AT EDGE OF RIGHT-OF-WAY
- CL-SST — EROSION CONTROL LOGS ON SLOPES STAKE AND TRENCHING ANCHORING
- CL-SSL — EROSION CONTROL LOGS ON SLOPES STAKE AND LASHING ANCHORING
- CL-DI — EROSION CONTROL LOG AT DROP INLET
- CL-CI — EROSION CONTROL LOG AT CURB INLET
- CL-GI — EROSION CONTROL LOG AT CURB & GRATE INLET

SEDIMENT BASIN & TRAP USAGE GUIDELINES

An erosion control log sediment trap may be used to filter sediment out of runoff draining from an unstabilized area.

Log Traps: The drainage area for a sediment trap should not exceed 5 acres. The trap capacity should be 1800 CF/Acre (0.5" over the drainage area).

Control logs should be placed in the following locations:

1. Within drainage ditches spaced as needed or min. 500' on center
2. Immediately preceding ditch inlets or drain inlets
3. Just before the drainage enters a water course
4. Just before the drainage leaves the right of way
5. Just before the drainage leaves the construction limits where drainage flows away from the project.

The logs should be cleaned when the sediment has accumulated to a depth of 1/2 the log diameter.

Cleaning and removal of accumulated sediment deposits is incidental and will not be paid for separately.

SHEET 1 OF 3

Texas Department of Transportation — Design Division Standard

TEMPORARY EROSION, SEDIMENT AND WATER POLLUTION CONTROL MEASURES

EROSION CONTROL LOG

EC(9)-16

FILE: ec916	DN: TxDOT	CK: KM	DW: LS/PT	CK: LS
© TxDOT: JULY 2016	CONT	SECT	JOB	HIGHWAY
REVISIONS				VARIOUS
	DIST	COUNTY		SHEET NO.
		DENTON		75

DISCLAIMER:
The use of this standard is governed by the "Texas Engineering Practice Act". No warranty of any kind is made by TxDOT for any purpose whatsoever. TxDOT assumes no responsibility for the conversion of this standard to other formats or for incorrect results or damages resulting from its use.

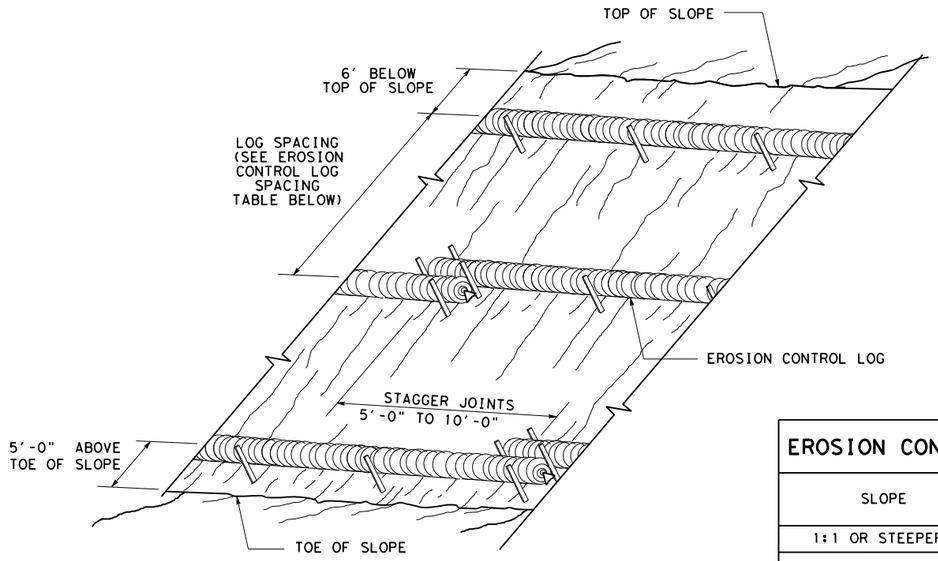

EROSION CONTROL LOGS ON SLOPES
STAKE AND TRENCHING ANCHORING

CL-SST

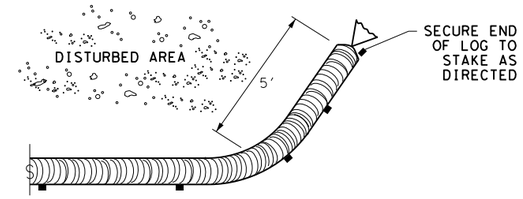

END SECTION RAP DETAIL

EROSION CONTROL LOG SPACING TABLE				
SLOPE	LOG DIAMETER			
	6"	8"	12"	18"
1:1 OR STEEPER	5'	10'	15'	20'
2:1	10'	20'	30'	40'
3:1	15'	30'	45'	60'
4:1 OR FLATTER	20'	40'	60'	80'

* ADJUSTMENTS CAN BE MADE FOR SOIL TYPE:
SOFT, LOAMY SOILS-ADJUST ROWS CLOSER TOGETHER;
HARD, ROCKY SOILS- ADJUST ROWS FARTHER APART

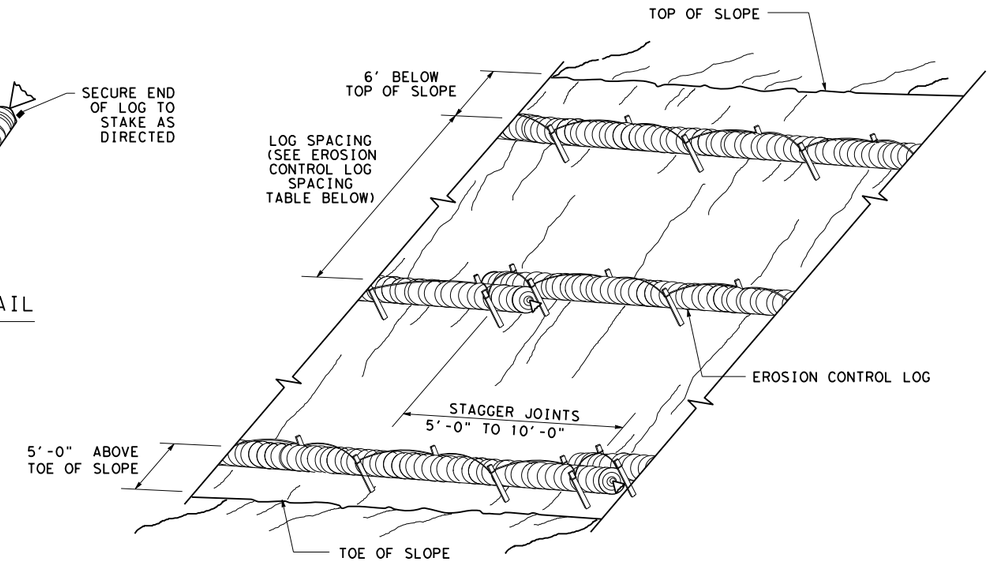

EROSION CONTROL LOGS ON SLOPES
STAKE AND LASHING ANCHORING

CL-SSL

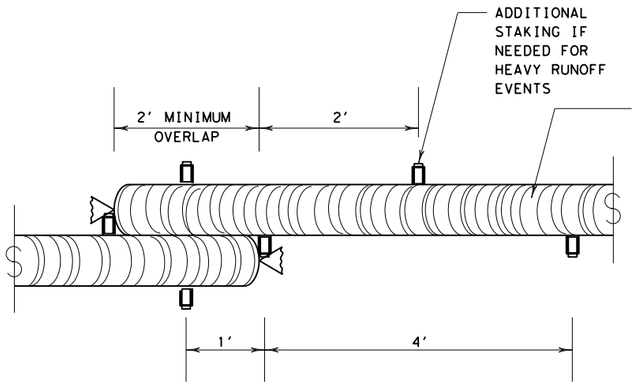

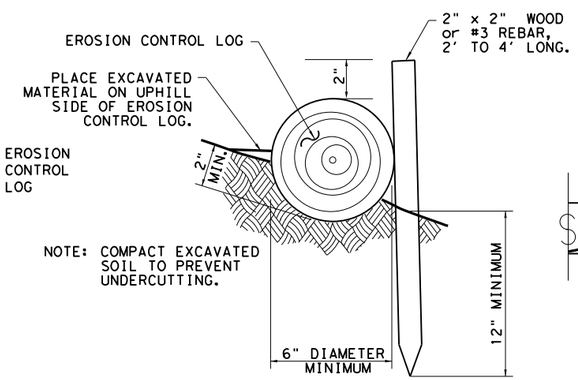

STAKE AND TRENCHING ANCHORING DETAIL

CL-SST

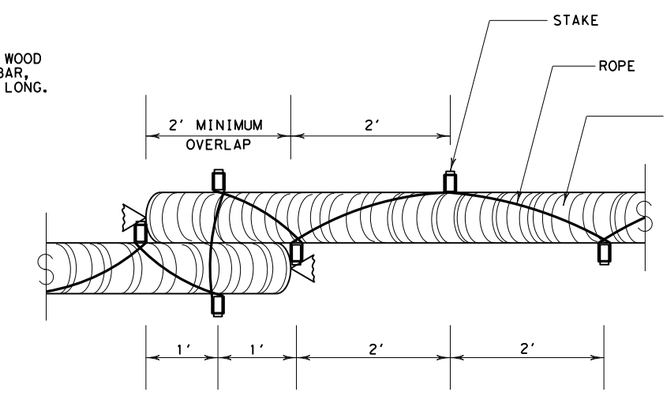

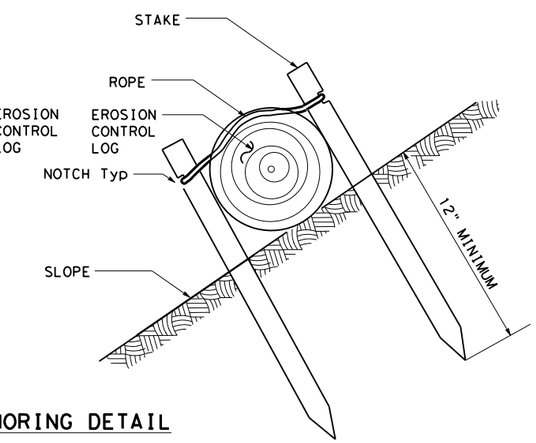

STAKE AND LASHING ANCHORING DETAIL

CL-SSL

TRENCH DEPTH TABLE	
LOG DIAMETER	DEPTH
6"	2"
8"	3"
12"	4"
18"	5"

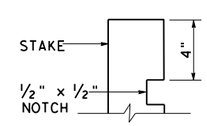

STAKE NOTCH DETAIL

SHEET 2 OF 3

Texas Department of Transportation — Design Division Standard

TEMPORARY EROSION, SEDIMENT AND WATER POLLUTION CONTROL MEASURES
EROSION CONTROL LOG
EC(9)-16

FILE: ec116	DN: TxDOT	CK: KM	DW: LS/PT	CK: LS
© TxDOT: JULY 2016	CONT	SECT	JOB	HIGHWAY
REVISIONS				VARIOUS
	DIST	COUNTY		SHEET NO.
		DENTON		76

DATE: 10/16/2025
FILE: S:\WHOU-Tran\5482\5482-2401\400 Production\4 - Design\Plan Set\9. Environmental\Standards\TxDOT\ec916.dgn

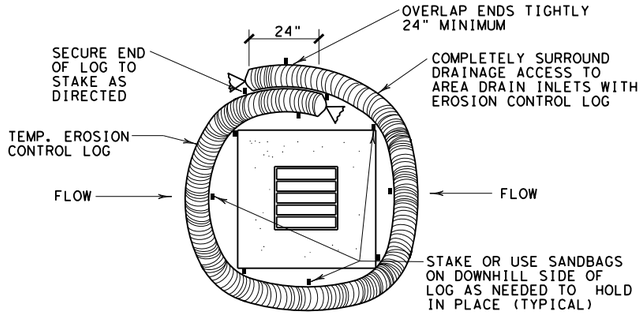

EROSION CONTROL LOG AT DROP INLET

CL-DI

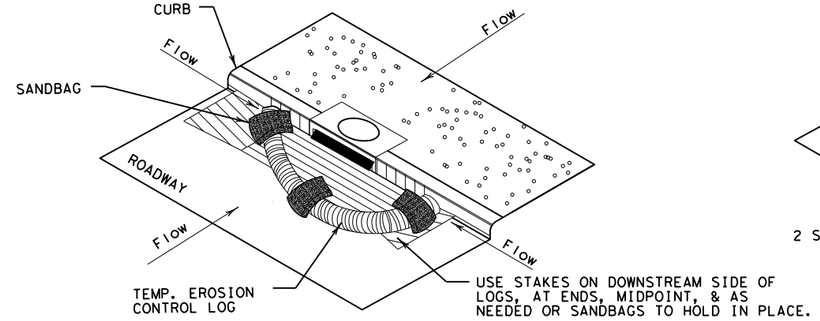

EROSION CONTROL LOG AT CURB INLET

CL-CI

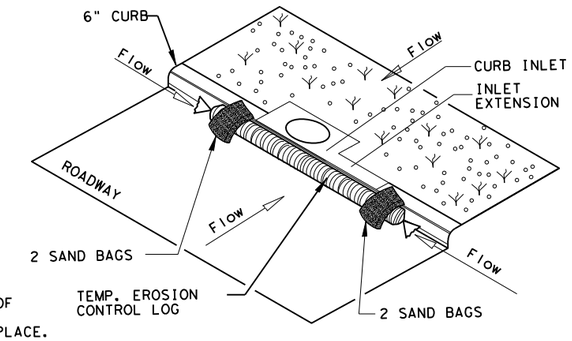

EROSION CONTROL LOG AT CURB INLET

CL-CI

NOTE:
EROSION CONTROL LOGS USED AT CURB INLETS SHOULD ONLY BE USED IF THEY WILL NOT IMPEDE TRAFFIC OR FLOOD THE ROADWAY OR WHEN THE STORM SEWER SYSTEM IS NOT FULLY FUNCTIONAL.

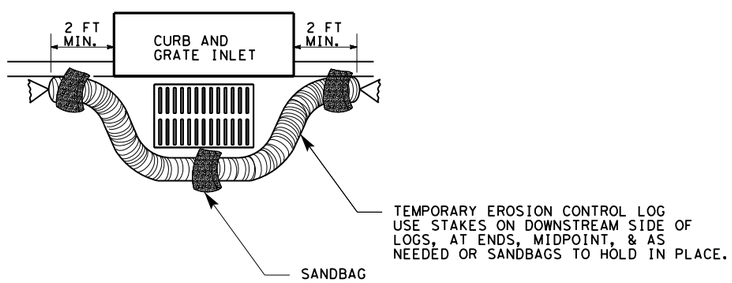

EROSION CONTROL LOG AT CURB & GRADE INLET

CL-GI

SECTION B-B

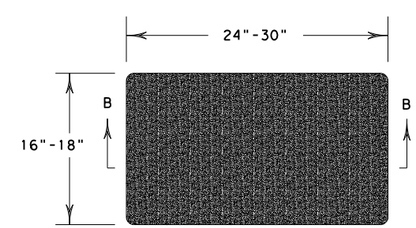

SANDBAG DETAIL

SHEET 3 OF 3

Texas Department of Transportation — Design Division Standard

TEMPORARY EROSION, SEDIMENT AND WATER POLLUTION CONTROL MEASURES

EROSION CONTROL LOG

EC(9)-16

FILE: ec916	DN: TxDOT	CK: KM	DW: LS/PT	CK: LS
© TxDOT: JULY 2016	CONT	SECT	JOB	HIGHWAY
REVISIONS				VARIOUS
	DIST	COUNTY		SHEET NO.
		DENTON		77

DISCLAIMER:
The use of this standard is governed by the "Texas Engineering Practice Act". No warranty of any kind is made by TxDOT for any purpose whatsoever. TxDOT assumes no responsibility for the conversion of this standard to other formats or for incorrect results or damages resulting from its use.

DATE: 10/16/2025
FILE: S:\WHOU-Tran\5482\5482-2401\400 Production\4 - Design\Plan Set\9. Environmental\Standards\TxDOT\ec916.dgn